Computer Life (CPL) ISSN: 1819-4818
DELIVERING QUALITY SCIENCE TO THE WORLD

Design of Cleaning car in machinery factory

Peng Yang [a], Tantan Li [b,] * and Yapeng Zheng [c]

School of Shangdong university of Science and Technology, Qingdao 266590, China.

[a]1500541791@qq.com, [b]1327196992@qq.com, [c]735093200@qq.com

---

Abstract: This thesis designs a cleaning Cleaning car in machinery factory. Firstly, the overall plan of the cleaning car is formulated; then, the specific function module of the trolley is selected and analyzed; finally, the structural modeling of the car is completed with the three-dimensional design software. Finally, it can realize the effects of automatic tracking, forward movement, intelligent obstacle avoidance, turning, and garbage sorting and cleaning of the car, which greatly saves the manpower and material resources of the machinery factory.
Keywords: Automatic tracking, Intelligent obstacle avoidance, Smart cleaning car.

---

1. INTRODUCTION

The advanced level of automation of environmental protection equipment in the machining workshop is one of the important criteria for measuring the level of industrial automation in a country. With the continuous improvement of the national economy, the degree of industrial automation is also increasing. When the production efficiency of the factory is continuously improved, the amount of garbage such as chips and packaging paper in the machining workshop is increasing, and the sanitary work of the workshop staff is increased. In particular, In particular, it is difficult for some dead zones to clean up. Based on the concept of green, environmental protection, intelligence and service, a special cleaning Cleaning car in machinery factory was designed. It can greatly reduce the manpower and material resources to improve the production efficiency of the factory. Therefore, it is necessary to carry out research on the special cleaning vehicle in the machining workshop.

2. OVERALL DESIGN

The cleaning vehicle adopts AT89S51Single Chip Micyoco(SCM) as the core control module, receiving the external environment information sensed by the sensor module and it can process the outside world information and output the signal to the motor drive module [1], if the sensor judges whether an obstacle is encountered according to different conditions of the outside world, If obstacles are encountered and the corresponding information is sent to the SCM, the SCM processes the received signals and outputs the signals to the driving module to control the direction of the cleaning car, thereby realizing the safety obstacle avoidance of the car during the cleaning process. The overall cleaning car module is shown in Figure 1.

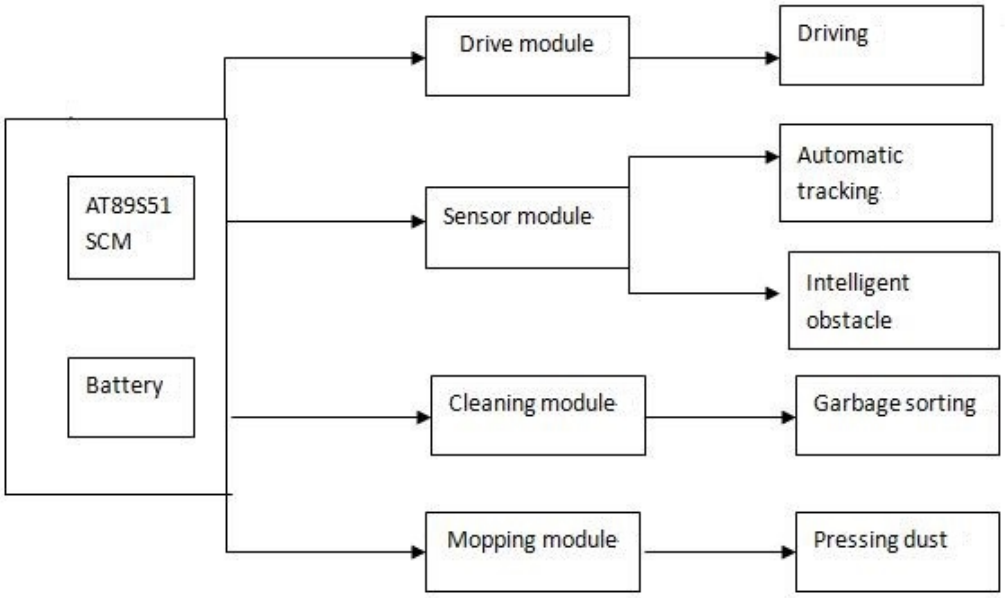

Figure 1Overall cleaning car module

3. DESIGN OF EACH MODULE

3.1 The design of the main control module

AT89S51 SCM is selected as the core of the main control module of the car. The intelligent vehicle in the control work realizes the expected goal. By fully analyzing our technical index, it is mainly used for the automatic tracking and obstacle avoidance of the car.

3.2 Design of drive device

The design of the cleaning car adopts four wheel drive, which has the following advantages over traditional car[2]:

(1) It can reduce mechanical components such as reducers, transmissions, and mechanical differential structures in the car. The electric wheel can be infinitely variable through electronic control.

(2) It is easy to use electric braking, speed regulation, and effective to improve the degree of automation.

(3) The four-wheel independent drive greatly simplifies the chassis of the car and can create different models.

3.3 Design of sensor module

The use of TCR5000 reflective photoelectric sensor shown in Figure 2 .The reflective photoelectric sensor is characterized by a simple circuit structure, The performance is relatively stable without the influence of external light.

Figure 2TCR5000 Reflective Photoelectric Sensor

The HC-SR04 ultrasonic sensor is installed at a certain height in front of the chassis of the car. When the car moves forward, the ultrasonic sensor emits a certain amount of waveform pulses to the front. At the same time, the single-chip microcomputer system uses the timer to count the time. If an obstacle is ahead, the ultrasonic sensor will receive To the reflected wave and generate a response signal through the ECHO pin to the SCM system, this timer stops timing, the propagation speed in the ultrasonic air is V=340m/s, the time counted by the timer is T, the single-chip microcomputer can calculate the just The distance between the launch position and the obstacle is S=VT/2. Compared with the preset safety distance, if the distance is less than the safe distance, the car turns to another place[3].

3.4 Design of cleaning module

The cleaning car adopts the front cleaning device. When the car is working, the motor rotates and then drives the L293D chip to slow down, driving the four-wheel wheel to rotate, driving the car forward, and at the same time the other end of the motor rotates the roller through the chain drive. The car is installed above the chassis of the car. The dripping device, which continuously rolls the dripping brush, and the high-speed rotation energy of the tumbling brush will “scram” the non-magnetic garbage such as paper scraps and dust in the workshop into the garbage collection box. We also installed a magnet bar in front of the chassis of the car. When the car is in operation, the magnet bar is driven by the linkage mechanism to rotate at the same speed as the drum. If magnetic debris such as iron nails are attracted by the magnet bar, it can be collected into the garbage collection box. The roller-magnet bar sweeping device has a simple structure, good effect, and convenient installation. It can work smoothly with the transmission of the sprocket and can work in the machining workshop for a long time. The cleaning module is shown in Figure 3.

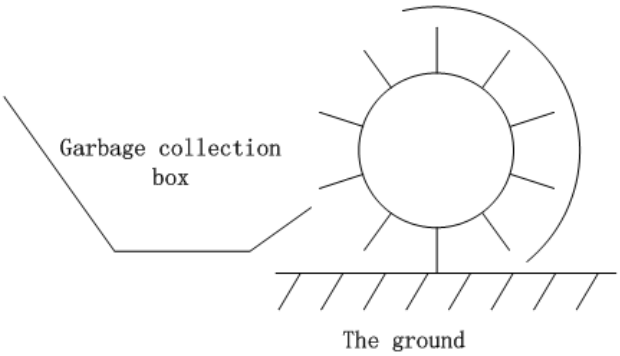

Figure 3 cleaning module

4. THE DESIGN OF THE OVERALL SIZE OF THE CLEANING CAR

(1) The wheelbase L

The length of the wheelbase determines the size of the vehicle, and it also affects the bearing capacity. The shorter the wheelbase, the smaller the total mass, total bearing capacity and minimum turning radius of the trolley. Although this can reduce the overall cost, the shorter the wheelbase, there are also many shortcomings: the overall length of the car is reduced, its waste load is reduced, the motor, power supply and other modules may not occupy the position, the wheelbase should account for 54% -60 %,Considering all of the above reasons, we can shorten the wheelbase design as much as possible while meeting various performance requirements. Since the car is a small and medium-sized cleaner, the total amount of garbage that is loaded in a single place is not too large. Refer to the size of the cleaner on the market. Initially set the wheelbase to l=1200mm.

(2)Wheel distance

The size of the track is related to the overall width, lateral stability and lateral bearing capacity of the trolley. The larger the wheelbase is, the larger the overall width and lateral stability of the trolley are, but the smaller the lateral load-carrying capacity is, and the larger the total mass of the trolley is, the greater the cost of the trolley is. The design of the wheelbase needs to consider the total width of the trolley. TheWheel distance B preliminary:

$$B = \frac{3}{4}W + 100 \times (\pm 80) \text{ 或 } B = \mathrm{k}L$$

In the formula, B- Wheel distance, mm

W- Overall width of the car, mm

L- wheelbase of the car, mm

K- coefficient

Selecting L=1200mm k=1.5

$$B = 1200 \times 1.5 = 1800.11mm$$

(3)Front suspension L_1, Rear suspension L_2

The size of front suspension of the car affects the size of the installation position of the cleaning module and the flexibility of the steering of the car. To ensure that the cleaning module can be properly installed and the car can be flexibly steered, thefront suspension L1 = 600 mm.The size of the rear suspension will affect the installation of the mop module and the passing rate when the car is turned. If the rear suspension is too small, the mopping module cannot be installed properly. When the rear suspension is too large, the tail of the car is too close to the obstacle. Considering that the rear suspension is designed to l2 = 300mm.

(4)Minimum ground clearance H

Minimum ground clearance H of the car affects the cleaning effect of the car, the oversize of the roller is too far from the ground, and the contact area between the brush and the garbage is smaller, but the clearance is too small, if the bump ground will affect the walking of the car, and the minimum clearance h=43.5mm is initially set up.

(5) The outline size of cleaning car

According to the wheelbase,wheel distance, the front suspension, the rear suspension, the size of the minimum ground clearance and the size of each module, the length and width of the cleaning car are determined to be 3353mm, 1900mm and 700mm respectively.

(6)Three dimensional modeling of cleaning car

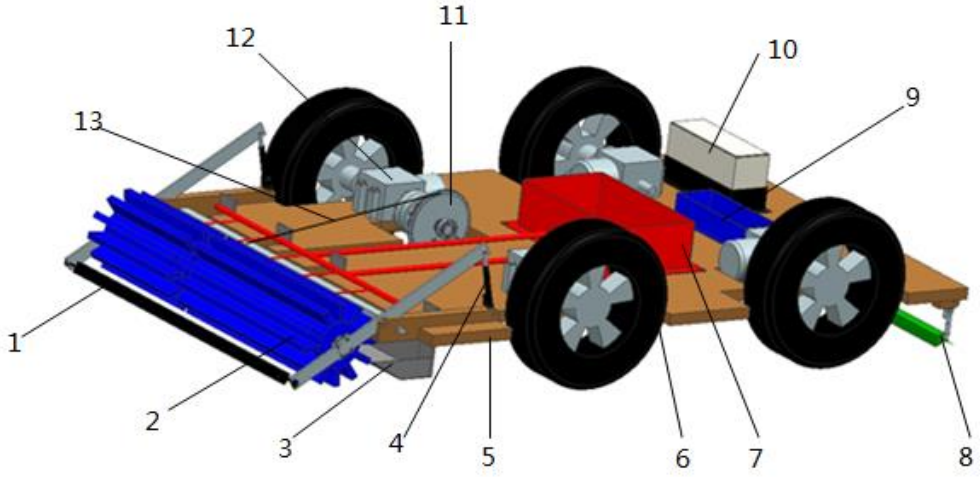

1- Magnet bar 2-Roller brush 3 - Garbage collection box 4 - Electric pusher 5-Cleaning car chassis 6-Wheels 7-Smart control box 8-Scraper 9-Intelligent control box 10-Power supply 11- Sprocket 12-DC motor 13-Chain

5. CONCLUSION

The functions of the cleaning car in machinery factory designed in this paper are as follows:

(1) The cleaning carcan realize automatic obstacle avoidance function by using ultrasonic module under the control of Single Chip Micyoco.

(2) The cleaning car is equipped with scraper trailing mechanism at the rear of the car. When the car is working, it can achieve the effect of sweeping firstly and then mop the floor.

REFERENCES

[1] ZHAO Hui Jiang,et al. A Neural Network Controller for Trajectory Control of Industrial Robot Manipulators[J], JOURNAL OF COMPUTERS, 2008, (8):3-8.

[2] LI Le, et al. Design of a four-wheeled independent drive electric vehicle control system [D]. Wuhan: Wuhan University of Technology, 2010.

[3] LIN Biqin,et al. Design and manufacture of smart obstacle avoidance trolley based on single chip microcomputer[J]. Electronic Testing, 2013(15):60-61.