Computer Life (CPL) ISSN: 1819-4818
DELIVERING QUALITY SCIENCE TO THE WORLD

Digital Perpetual Calendar Design Based on Single Chip Microcomputer

Jijin Zhu

Guangdong University of Science & Technology, Dongguan, 523083, China

---

Abstract: The twenty-first century is an era of highly advanced electronic development. People's pursuit of tools has also become simple, convenient, and efficient [1]. However, the concept of time is getting deeper and deeper. People have become more and more focused on time, which has prompted the development of clocks. This design and production is based on STC89C52 as the core, DHT11, DS1302 realize temperature and humidity, time data acquisition system, and with the key circuit, power circuit, reset circuit, amplifier circuit composed of multi-function calendar system, the final completion of the day and month through the LCD display , Year, Hours, Minutes, Seconds, Temperature and Humidity, etc. This design decided to adopt the one-chip computer STC89C52 as the main control system, adopt LCD12864 liquid crystal display screen as the display module and offer the final data to user, the clock module adopts DS1302 clock chip to connect AT89C52 to finish the computational function of the time, the temperature and humidity collection adopts the sensor DHT11 chip , using 3 ~ 5V DC power supply for the microcontroller and other chips to complete, so as to achieve multi-function calendar function.
Keywords: microcontroller; time; digits; perpetual calendar.

---

1. INTRODUCTION

With its long life, stable performance, and ultra-low power consumption, the DS1302 brings more competitive advantages to the electronic clock and displays the final information on an LCD display, compared to the past viewing methods. It is more intuitive and comprehensive. The button module can complete the calibration of date and time. Use 3~5V voltage supply. With low energy consumption, safety, accuracy, stability and other characteristics, it can meet people's basic needs of daily life information, in line with the development trend of electronic calendar. Figure 1 below is a sectional view of the electronic calendar to be completed in this design.

Figure 1 Cross-section of a digital calendar based on a single-chip microcomputer

2. GENERAL OVERVIEW OF THE DIGITAL CALENDAR

At present, the SCM has penetrated into all areas of our lives, and it is almost impossible to find out which area does not have a trace of the SCM. Navigation devices for missiles, control of various instruments on aircraft, network communication and data transmission for computers, real-time control and data processing for industrial automation processes, various kinds of smart IC cards that are widely used, security systems for civilian luxury cars, video recorders, Cameras, automatic washing machine control, and program-controlled toys, electronic pets, etc., these are inseparable from the microcontroller. Not to mention robots, smart meters, medical devices, and various smart machines in the field of automation[2].

MCU multi-function calendar production there are many ways, the use of supply chain management model and application technology is different, so in the design and production of the system under the premise of the system environment, the design should be taken into account, the structure is simple, easy to complete, selected The device should focus on factors such as its stable performance, power consumption, and its cost. The designed system architecture often determines the choice of components, taking into account performance, stability, power consumption, and circuit design features.

Microcontrollers have the advantages of small size, low power consumption, strong control functions, flexible expansion, miniaturization, and ease of use. They are widely used in instrumentation, and combine different types of sensors, such as voltage, current, power, frequency, humidity, etc. Measurements of physical quantities such as temperature, flow rate, velocity, thickness, angle, length, hardness, element, and pressure. The adoption of single-chip microcomputer control makes the instrument and meter digital, intelligent and miniaturized, and the function is more powerful than using electronic or digital circuits.

3. MCU CHIP SELECTION AND DEMONSTRATION

To prevent unauthorized access or copying of the microcontroller's internal programs, most microcontrollers have an encryption lock bit or an encryption byte to protect the on-chip program; if the encryption lock bit is enabled (locked) during programming, it is impossible to Using an ordinary programmer to directly read the program in the SCM, the SCM attacker uses a dedicated device or a self-made device to exploit the vulnerabilities or software defects of the SCM chip design. Through a variety of technical means, it can extract key information from the chip and obtain the SCM. Inside the program this is called MCU decryption[3]. After most of the single-chip microcomputer programs were written into the single-chip microcomputer, engineers used encryption to prevent others from reading out the programs in order to prevent others from using them illegally.

The SCM is a kind of integrated circuit chip. It is a CPU with a data processing capability using a VLSI technology. It has a CPU random access memory (RAM), a read-only memory (ROM), a variety of I/O ports and interrupt systems, and a timer/timer. Other functions (which may also include display driver circuits, pulse width modulation circuits, analog multiplexers, A/D converters, etc.) are integrated into a small, complete computer system built on silicon. MCU AT89C51 as a control chip, it has 4K bytes of ROM flash, can work in ultra-low voltage 3V, and fully compatible with MCS-51 microcontroller, but it does not have ISP online programming technology, if you use the chip, in the process of compiling

When debugging, the chip needs to be plugged and unplugged many times, so that it is easy to cause damage to the chip and is not conducive to production. Therefore, the chip is not used.

Therefore, the core control chip selects the one-chip computer STC89C52, it has 8 kilobytes of flashing memory, also completely compatible with MCS-51 series one-chip computers. The feature of this device is that it does not need to insert and remove the chip repeatedly when repairing or increasing or decreasing the function and repeatedly burning the program, so that the chip will not be damaged. Because STC89C52 has the function of AT89C51, and has ISP online compiler technology, so choose the one-chip computer STC89C52 as the design of the main chip.

4. MCU AND ITS PERIPHERAL CIRCUIT

This program will use the new microcontroller STC89C52 as the main control chip, with many advantages, the traditional 51 microcontroller has no advantage. With superior anti-jamming capability, the processing data speed is increased, and the minimum operating voltage only needs 3.3V, which can meet almost all the requirements of the development of ordinary microcontrollers[4]. The pin diagram is shown in Figure 2 below.

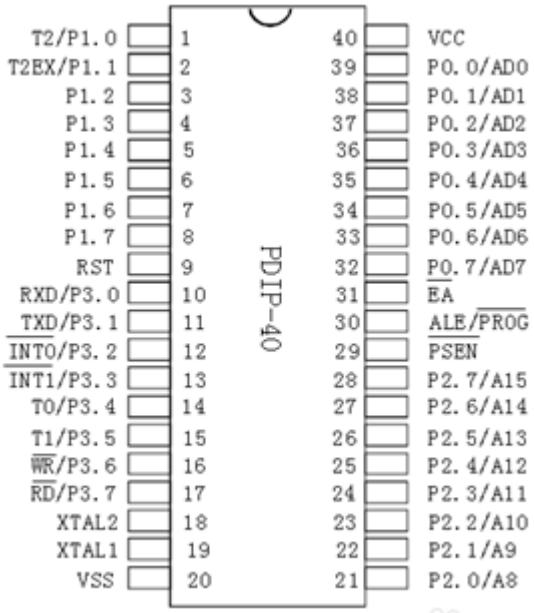

Figure 2 Microcontroller Pin Diagram

In addition, STC89C52 is a 40-pin microprocessor. The ports involved in this design will be described in detail below: VCC port (pin 40): power supply; VSS port (pin 20): ground.

P1.3, P1.4, and P1.5 ports (Pins 4, 5, and 6): P1 ports (P1.0 to P1.7, pins 1 to 8): P1 port is a bidirectional I/O The port, which has a transmission bit width of 8, has its own pull-up resistor. When the data received at the port is 1, an internal pull-up resistor will set the port to a high potential so that it can be used as an input port. In this design, the timing chip is connected to the above port as an input port to complete the collection of timing chip output information.

5. APPLICATION CIRCUIT DEAGRAM

The wiring of this component should be used within 20 lines and equipped with a 5KΩ pull-up resistor. If the line length exceeds 20m, adjust the resistance value according to the actual situation. Figure 3

below is an application circuit diagram of a digital perpetual calendar design based on a single-chip microcomputer.

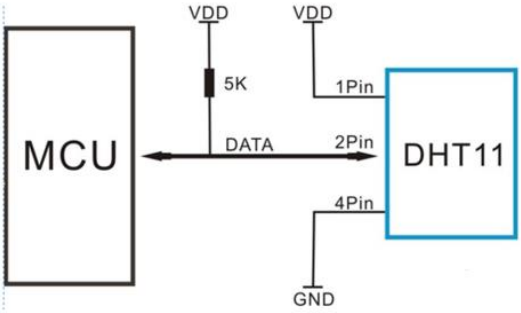

Figure 3 application circuit diagram

The temperature and humidity sensor, communication and synchronization master chip through the data bus, for a single format, to achieve a communication time of about 4 ms, the data is divided into two parts: decimal and positive numbers. A complete packet transmission size is 40 bits, high-first-out.

Because the sensor DHT11 outputs a digital signal and the package is simple, it can be easily connected to the microcontroller STC89C52 in this design to achieve the preset function. Here, the pin2 port of the sensor is used to connect the P3.1 port of the MCU, and the P3.1 port of the MCU is the data port, which can be used to send and receive serial data, because the design is completed on a small circuit board, and the temperature and humidity are connected. The line length of the sensor is less than 20m, so the pull-up resistor used is 5kΩ, which is connected between the power supply and the pin2 port of the DHT11. The pin3 port is suspended, and the pin1 and pin4 ports are connected to the power supply and ground, respectively[5].

6. CONCLUSION

STC's single-chip microcomputer is mainly based on the 8051 core, is a new generation of enhanced microcontroller, instruction code is fully compatible with the traditional 8051, 8 to 12 times faster, with ADC, 4-channel PWM, dual serial port, a globally unique ID number, good encryption Strong anti-interference. Due to the wide application of single-chip microcomputers in the field of industrial control, single-chip microcomputers are developed from dedicated processors of the CPU in the chip. In this article, we only studied the design of digital calendar based on single-chip microcomputer. There are still many fields in real life that can make great breakthroughs by using single-chip microcomputer technology.

REFERENCES

[1] Chen Jingpei;Development and Application of AT89S52 Microcontroller Experiment System [D];Jiangnan University;2007
[2] Lin Min,Yu Zhongde;Extended LED display interface circuit of AT89C2051 microcontroller serial port[J];Measurement Technology;2002-08
[3] SUN Shi-yu, WANG Yun-e;;Using SCM Virtual Serial Port to Drive Multi-LED Display[J];Jiangsu Electric Apparatus;2006-01
[4] Liu Yan,Huang Shouzhi,Li Lijuan;A Method of Display Data Acquisition[J];Journal of Beihua University(Natural Science Edition);2002-06
[5] Zheng Zhicong;Application of Serial Transmission Technology in LED Display[J];Mechanical and Electrical Engineering;2008-02