Computer Life (CPL) ISSN: 1819-4818
DELIVERING QUALITY SCIENCE TO THE WORLD

# Design and Implementation of Portable Rangefinder System

Libo Yang

Guangdong University of Science & Technology, Dongguan, 523083, China

---

*Abstract: Portable range finder is an instrument that uses laser to accurately measure the distance of a target. The portable rangefinder emits a very thin laser beam to the target during operation. The photoelectric element receives the laser beam reflected from the target. The timer measures the time from the laser beam emission to the reception and calculates the distance from the observer to the target. The distance, area, and volume can be measured, and measurements can be made both indoors and outdoors. Due to its ease of use, the portable rangefinder is widely used in various industries. In this paper, after introducing the functional parameters and working principle of the portable range finder, the design and implementation of portable range finder system are introduced in detail.*
*Keywords: portable range finder; functional parameters; working principle; design; implementation*

---

## 1. INTRODUCTION

The portable rangefinder is an infra-red pulse that is invisible to the human eye after being aimed at an object, and then calculates the precise distance of the target by continuously measuring the pulse back and forth time. The portable rangefinder is an infra-red pulse that is invisible to the human eye after being aimed at an object, and then calculates the precise distance of the target by continuously measuring the pulse back and forth time. The laser measurement distance mainly depends on the degree of reflection of the target object, and the general traffic sign plate has the best effect. Because the color of the target, the degree of surface treatment, the size, and the shape of the target will directly affect the reflectivity of the object and thus affect the distance of the distance measurement. The portable rangefinder has a simple, lightweight, artistic design, so it is widely used in industrial inspections, power sector surveys, railway surveying and mapping industry. Outdoor sports surveys such as golf, hunting, building surveying and design, firefighting systems, etc. Figure 1 below shows the appearance of a commonly used portable rangefinder.

Figure 1 portable rangefinder

## 2. HOW DOES A PORTABLE RANGEFINDER WORK?

If the laser is continuously fired, the measuring range can be up to 40 kilometers, and the fluorine-plated butterfly valve can be operated day and night. If the laser is pulsed, the absolute accuracy is generally low, but for long distances, good relative accuracy can be achieved. The first laser in the world was first developed in 1960 by Meman, a scientist of the Hughes Aircraft Company in the United States. The US military soon carried out research on military laser devices based on this. In 1961, the first military laser range finder passed the US military demonstration test, after which the laser range finder quickly entered the utility consortium. The laser rangefinder is lightweight, small in size and easy to operate[1]. The error is only one-fifth to one-hundredth of that of other optical distance meters. It is widely used in topographic measurement, battlefield measurement, and tanks. Targets are measured by aircraft, ships, and artillery, and the heights of clouds, aircraft, missiles, and artificial satellites are measured. It is an important technical equipment to improve the accuracy of high tanks, aircrafts, ships and artillery. As the price of laser rangefinders continues to decrease, the industry has gradually begun to use laser rangefinders. At home and abroad, a number of new miniature distance meters with fast ranging, small size, and reliable performance have emerged, which can be widely used in industrial measurement and control, mining, ports and other fields[2]. The main classification of one-dimensional laser range finder is used for distance measurement and positioning. Two-dimensional laser range finder is used for contour measurement, positioning, area monitoring and other fields. Three-dimensional laser range finder is used for three-dimensional contour measurement, three-dimensional space positioning and other fields.

## 3. PORTABLE RANGEFINDER SYSREM DESIGN

In this section, the circuit design of each part of the portable range finder system design is explained in detail. In addition, it will be explained with relevant diagrams.

### 3.1 Master Control Circuit

As the most important and most critical part of the entire ultrasonic speed measurement system, this design selects the STC89C52 microcontroller. STC89C52 microcontroller has a very strong anti-jamming capability, but also has a very high computing speed and low energy consumption

characteristics, to ensure its application and overall performance indicators. Figure 2 below shows the minimum hardware system of the ultrasonic range finder designed this time.

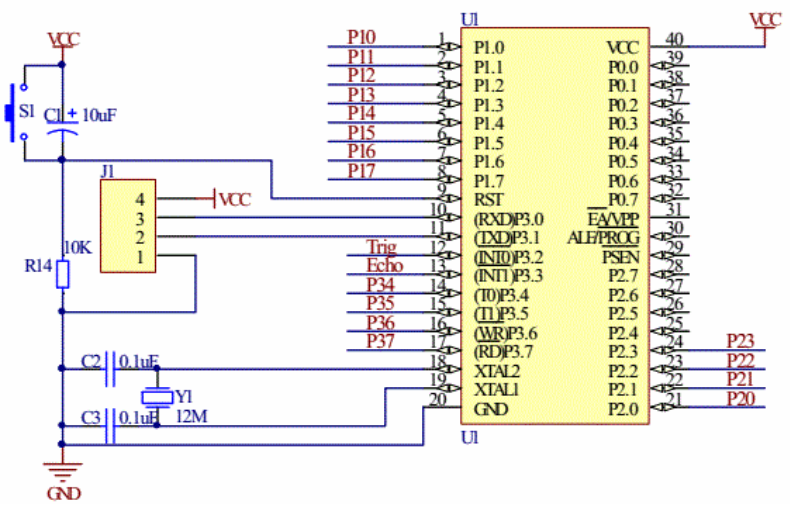


Figure 2 master control circuit

### 3.2 Button Module

The button module for ultrasonic distance measurement designed this time is an independent button, and only 3 of the related circuits are used. Independent keys, one for the set key, the two outside the two are plus and minus keys. Set the key as the test of this design[3].The alarm distance required by the instrument is set. The addition and subtraction of the two keys are the control of the distance and the distance measured. Less than the alarm distance, the buzzer will start the alarm. Figure 3 shows the relevant circuit diagram of a separate key in the system.

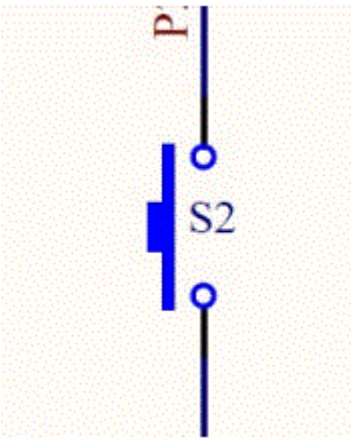


Figure 3 independent key system diagram

### 3.3 Test Module

Ultrasonic test module is one of the most important parts of ultrasonic distance meter. The choice of ultrasonic module determines the performance of the whole machine. This design chooses to use HC-SRO4 as the ultrasonic module of this ultrasonic rangefinder. The module can provide 2cm-500cm range without contact in the range, and the accuracy of ranging can reach up to 3um. This module contains ultrasonic transmitters, ultrasonic receivers and control circuits[4]. This test module uses 10

TRIG triggers and then performs distance measurement. Only 10us high level signal is required. The test module will send 8 40KHz square waves by itself and then automatically detect whether the signal returns or not. When the signal returns, it gives a high level to the output of the 10 ports. How long this high level lasts proves how long the ultrasound has gone back and forth. Test distance = (high time * speed of sound (340M / S) / 2. Where VC for 5V power supply, GMD for the ground line, TRIG trigger control signal input, ECH1O reverberation signal output and other four lines. Figure 4 shows the ultrasonic device Related circuit diagrams.

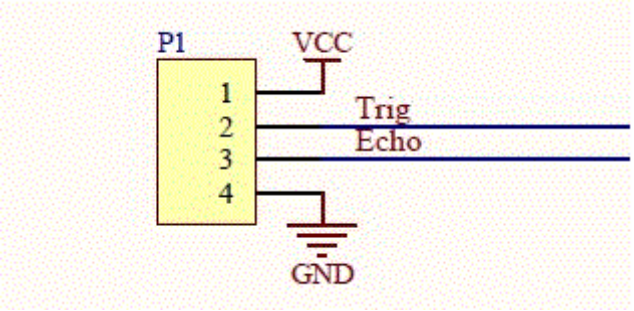


Figure 4 Test module

### 3.4 Display Module

The display module of the ultrasonic distance meter designed this time is considered to be the most important piece, because the distance measurement module shows the final ranging result, using a 4 digital tube to display the last ranging result on the top two The measured number of meters, and the last two centimeters. The display module adopts digital tube display interface circuit as shown in Figure 5.

Figure 5 shows the module

## 4. SYSTEM WELDING DEBUGGING

In the final debugging of the actual object, welding the various modules is the most important process. The setting and testing of each module can only be performed after the welding is completed. The welding step is to first weld the various module chips and materials of the system, and finally, after each module is soldered, start the separate module inspection and debugging[5]. In order to obtain good welding results, it is important to remember the order of welding and the key points of welding, and strictly follow the welding procedure. At the very beginning, hold the soldering iron to the right, and then hold the component or the wire with a needle-nose pliers in the left hand. Before soldering is about to begin, the soldering iron must be fully preheated and must contain enough tin on the tip. The tip of the soldering iron head is then brought into close contact with the point where soldering is required. In terms of angle, the soldering iron tip is also required to be within a range of about 45° from the horizontal plane. So that the molten tin can flow directly from the top of the soldering iron to the soldering point. When

taking away the solder wire, the soldering iron should be kept in the soldered place for about 2 to 3 seconds. When the solder wire is removed, the soldering iron should not be removed immediately. Keep the solder and complete the wetting and diffusion. The process waited until the solder joints took away the soldering iron at the brightest moment, and the left hand held the components and remained still. Wait 10 seconds for a large time. After the tin has cooled and solidified at the joint, the left hand can be released. Throughout the welding process, the occurrence of imaginary welding, short circuit, misalignment, low tin, multiple tin, reversed polarity, etc. should be avoided, and attention should be paid to the simplicity of the wiring and the correctness of the wiring.

## 5. CONCLUSION

The ultrasonic distance meter designed and researched uses the most simple electronic components and related materials to be soft. The hardware is fully integrated, making full use of the AT89852 microcontroller and the microcontroller's peripheral interface to achieve. Ultrasonic distance measurement system, counting principle is to use a single-chip timer and counter to complete. So this time. The overall performance of the designed ultrasonic range finder is quite good, plus the advantages of strong humanity, high reliability and high performance. As a simple function, it also reached the digital display control intelligence.

## REFERENCES

[1] Yu Xicun. Microcontroller Principle and Interface Technology [. Xi'an Xi'an: Xidian University Press, 2000

[2] Tang Taobo,Chen Yulin.Intelligent wireless security alarm based on AT89C51[J].Electronic Design Application,2003,5(6):49~51

[3] Li Quanli. Microcontroller Principle and Interface Technology[]. Beijing: Beijing University of Aeronautics and Astronautics Press, 2004.

[4] Xue Junyi Zhang Yanxu. MCS-51 Single Chip Microcomputer and Its Application[ Xi'an: Xi'an Jiaotong University Press, 2005.

[5] Xu Ai-Dong, Peng Xiu-Hua. Microcontroller High-Level Language C51 Application Programming []. Beijing: Beijing University of Aeronautics and Astronautics Press, 2006