Computer Life (CPL) ISSN: 1819-4818
DELIVERING QUALITY SCIENCE TO THE WORLD

Siemens PLC controlled four-story elevator design

Degen Chen

Guangdong University of Science & Technology, Dongguan, 523083, China

---

Abstract: With the continuous development of science and technology, more and more buildings are becoming more and higher in the city. In order to make it easier to go upstairs, elevators are also a kind of vertical traffic public transportation tools that are often used by people. They are also indispensable. There is also a wide range of applications in modern life. This article describes the use of Siemens S7-200 programmable controller to control the elevator system. First of all, the components of the elevator are analyzed and the overall design process is determined. Based on this, the hardware part of the system is designed. In the hardware design process, I/O assignments are made to the input and output points required by the control system because the number of output points is considered to be excessive and needs to be performed. I/O expansion, expansion module selection EM223, then draw the elevator control flow chart, according to the flowchart and the I/O address allocation, draw a ladder diagram, in the design also used the middle relay and timer, and finally the program The commissioning and operation were carried out and the lifting and lowering of the elevator as well as the opening and closing of the door could be well performed and the requirements for the design task were fulfilled. Finally, use the MCGS configuration software to create a man-machine dialogue interface to check the operation of the elevator PLC control system.
Keywords: Siemens; PLC control; elevator design.

---

1. INTRODUCTION

Since the invention of the elevator, the electrical control technology has achieved unprecedented development. The electrical control technology is mainly embodied in the design of the elevator electrical control system. The elevator position signal, command signal, speed signal and safety signal can be designed and managed. Because the traditional elevator design technology has poor stability and high failure rate, this article selects Siemens PLC-controlled elevator design technology[1].

2. THE COMPOSITION OF THE ELEVATOR

The elevator is a complex running device. The composition of the elevator is described below to explain the elevator's main circuit and main electrical equipment.

2.1 Main circuit of AC double speed elevator

Elevator-dedicated two-speed cage asynchronous motor (4/16 pole); KMI, KM2 are motor forward/reverse contactors for elevator up and down control; KM3 and KM4 are elevator high and low

speed running contactors. To achieve the high-speed or low-speed operation of the elevator; KM5 is to start the acceleration contactor; KM6, KM7, KM8 is the contactor when decelerating and braking; L1, L2 and R1, R2 are the reactance and resistance in the stator circuit of the motor. KM5 - KM8 cooperates with motor acceleration and deceleration control. When KM1 or KM2 and KM3 are powered on, the elevator will start up or down. After the delay, KM5 will power on and off. When R1 and L1 are cut off, the elevator will turn to the up or down steady running; when the elevator receives the stop layer, After the command, KM3 is powered off and released, KM4 is energized, the motor is switched to low speed, and the motor is switched to low-speed braking to achieve a rising and falling low-speed operation. KM6 -KM8 are energized in turn to control the braking process. Strength, improve the comfort of the parking brake; when the leveling level is reached, the contactors are all de-energized, the mechanical brakes are closed, and the elevator stops operating. In the overhaul state, the elevator can only jog with a low speed connection[2].

2.2 The main electrical equipment of the elevator

2.2.1 traction motor

The gear traction system is used as the lifting mechanism of the elevator and mainly consists of a drive motor, an electromagnetic brake (also called an electromagnetic brake), a decelerator, and a traction sheave.

2.2.2 Automatic Door Machine

It is used to complete the opening and closing of the elevator: the doors of the elevator have hall doors (one on each floor) and car doors (only one). Only when the elevator stops at a certain landing, the hall door is allowed to open (the door is pulled by the door machine, the door is driven by the door); only when the hall door and the car door are closed are the start-up operations allowed (In the maintenance state, it can be operated without closing the door).

2.2.3 Floor instructions

The floor indication is also called the floor display. It used to be composed of low-voltage light bulbs, installed above each floor hall door and above the car door inside the car; it is now composed of a digital tube or LED dot matrix structure, and a call box. The direction of operation indicates a one-piece structure.

2.2.4 Call box

The call box is also called a call box or an outbound call box to summon the elevator at each floor. It is often installed on the wall about 1m away from the ground outside the hall. The base station and the top station have only one button, and the middle level station consists of two buttons, the upper call and the lower call. The button has a call memorizing lamp[3]. When the light is on, it indicates that the call signal has been received and memorized; when the elevator meets the call request and stops to open the door, the call memorizing lamp goes out. The base station's call box is often equipped with a key switch for the elevator administrator to switch the elevator.

2.2.5 Control Box

The control box is installed in the car for drivers and passengers to issue action commands to the elevator. The operating box is provided with the same number of floor selection buttons (with instructions) as the elevator landings, up and down start buttons (with upper and lower indication memory lamps, used

during maintenance), opening and closing door buttons, emergency stop button, The elevator operation status selects the key switch (choose whether the elevator is in automatic operation or in maintenance state) and the control switch for fans, lighting, etc.

2.2.6 flat floor and door opening device

It consists of a magnet plate and upper and lower leveling sensors 1KR and 2KR. When it is ascending, 1KR first inserts a magnet plate to send a deceleration signal, and the elevator starts to decelerate. When the 2KR is inserted into the magnet plate, a stop and door open signal is sent, the motor stops, and the mechanical brake is closed; when the cable is lowered, 2KR is first inserted into the iron plate. , Send a deceleration signal to 1KR when inserting the iron plate, send the parking and opening signal.

3. ELEVATOR MAIN CIRCUIT AND CONTROL CIRCUIT DESIGN

3.1 Leading motor main circuit design

As shown in Figure 1 below: Q power master switch M AC double speed motor KM7 slow contactor, KM6 quick contactor, KM1 up contactor, KM2 down contactor, KM3 contactor KM4, first deceleration contactor, KM3 Second deceleration contactor.

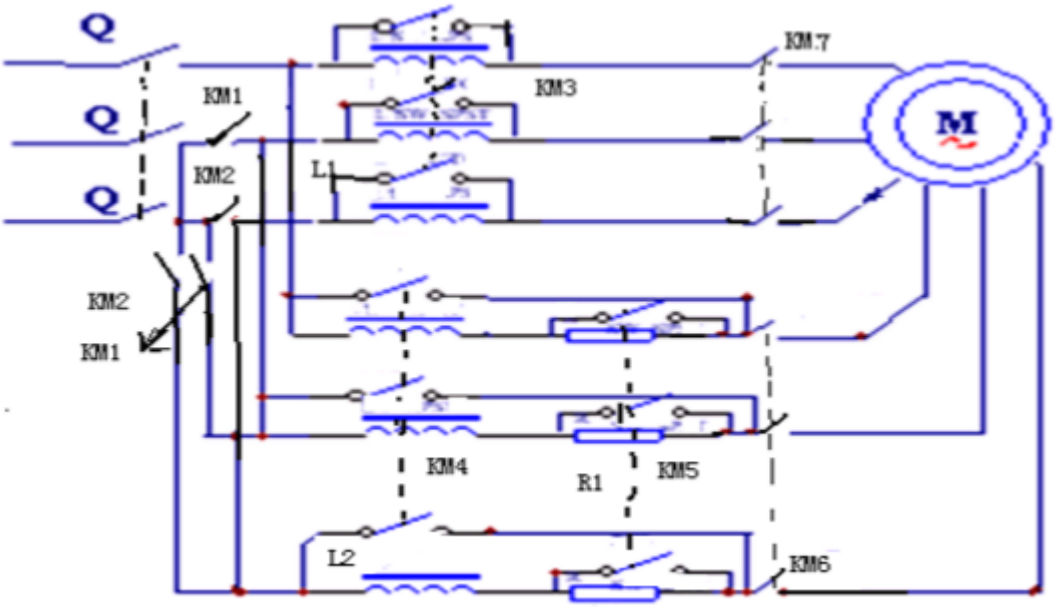

Figure 1 Leading motor main circuit

3.2 Control Circuit Design

According to Siemens PLC controlled four-story elevator control system, the control circuit involved in this article must be able to complete the car instructions, outside the hall summoned instructions, floor position guidance, leveling speed control, open the door control and other actions. The elevators involved in this article follow the following rules during the operation: (1) When the elevator is on the first floor, press the "four" command switch in the compartment and the elevator should stop on the fourth floor; (2) The outside hall should be called on the first floor. The elevator should From the fourth floor down to the first floor to pick up people; (3) Press the in-room command switch "3" and press the second floor upper call switch. The elevator should be accessed from the second floor and then to the third floor; (4) When the elevator is in the third At the time of building, the in-room switch “2” is set to

"4" and "1". The elevator should go down to the second floor, down to the first floor, and up to the 4th floor; (5) The lift is on the first floor, and the inside of the switch is called "2". Immediately afterwards, press the third floor.The fourth floor should be under the call switch. The lift should go to the second floor first. After getting off the passengers, it will rise to the fourth floor and then pick up the passengers, and then pick up the passengers on the third floor[4].

3.3 External wiring diagram of PLC

According to the elevator operation rules described above, it is known that the elevator will encounter a variety of situations during actual operation. This also shows that the elevator control circuit design is very complicated and there are many lines. Figure 2 below is the external wiring diagram of the PLC, which is the core part of controlling the elevator operation.

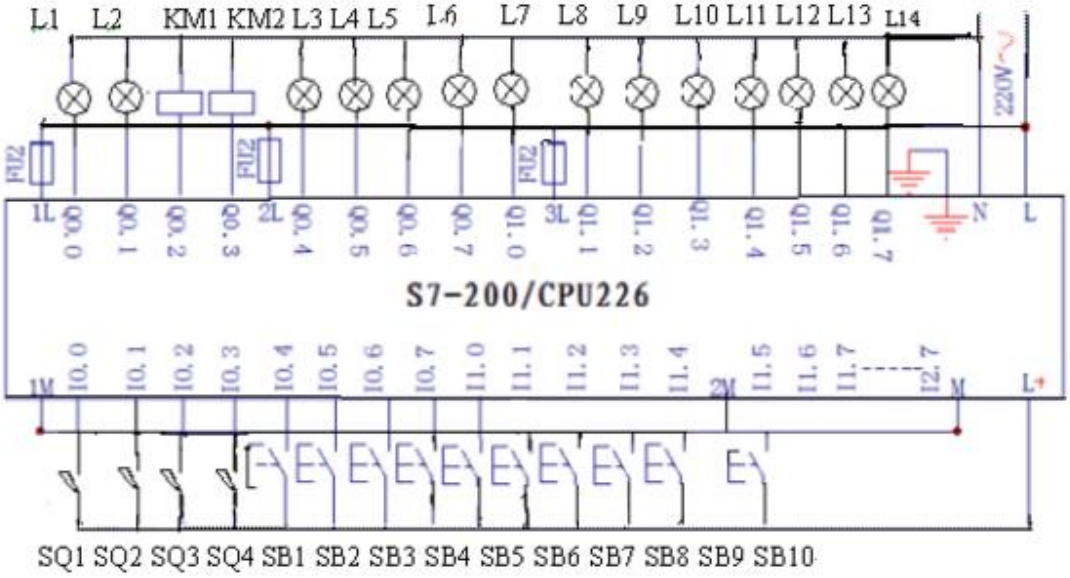

Figure 2 External wiring diagram of PLC

4. DESIGN AND USE OF MCGS CONFIGURATION SOFTWARE

The MCGS software has an all-Chinese, window-oriented visual interface. Strong real-time, good parallel processing performance and rich and vivid multimedia screens. The open architecture of MCGS software has extensive data acquisition and powerful data processing capabilities. At the same time can provide a good security mechanism for different levels of users to set different operating rights. The MCGS configuration software supports a variety of hardware devices and implements "device-independent". The user does not have to affect the entire system due to local changes of external devices. MCGS configuration software consists of two systems: "MCGS Configuration Environment" and "MCGS Operation Environment." The two parts are independent and closely related[5].

This article uses MCGS configuration software design. Select the appropriate serial communication device in the Device Configuration window and add the Siemens S7-200 PLC. Set its properties correctly. Correctly setting the connection of the data variable device channel in the configuration software enables communication between the PLC and the configuration software. Combining the serial port driver program in the PLC with the demand response of the configuration software enables the computer to respond to signals sent from the PLC. Create an animation interface in the user window of

the MCGS configuration software. Set the properties of each control on the interface so that the controls of the device act according to the actual situation, and test and test the control effect of the elevator PILC control system on the running state of the elevator. MCGS uses a master window, a device window, and a user window to form a human-computer interaction graphical interface of an application system. Configurations configure various objects and configurations of different types and functions. Real-time data can be visualized.

5. CONCLUSION

The elevator is an indispensable transportation equipment for modern high-rise buildings. With the ever-increasing scale of buildings, higher requirements have been placed on the accuracy of elevator speed control, speed regulation, and the like. This poses new challenges to motor performance and control modes. The S7-200 programmable controller is a new programmable controller developed by Siemens of Germany. It has reliable operation, strong functions, large storage capacity, and easy programming. The output can directly drive 2A relays or coils of contactors. PLC control system has become the most widely used control method in elevator control systems due to its high operational reliability, convenient use and maintenance, strong anti-interference, and short design and debugging cycles. It is also widely used in traditional relay control systems. Technological transformation. However, with the development of society, elevator control technology also needs new ideas and ideas, so we must always maintain innovative thinking and motivation.

ACKNOWLEDGMENTS

This paper is funded by Project of: Research on school enterprise cooperation scheme depend on industrial robot, Characteristic innovation project of guangdong province in 2016(2016KTSCX158).

REFERENCES

[1] Li Tao.Design and Implementation of Elevator Control System Based on PLC[J];Instrumentation & Instrumentation;2010-03
[2] Lu Yanfang Zhu Guixian. Design of Elevator Control System Based on PLC[J];Coal Technology; 2011-08
[3] Shi Xianchuan. Development of a Small Elevator Model Based on PLC Control[J]; Microcomputer Information;2008-13
[4] Liu Wei. Virtual Elevator Design Based on Siemens S7-300 PLC[D]; Ocean University of China; 2009
[5] Chen Jialong. Design and Implementation of an Eight-Story Elevator Control System Based on PLC[D]; Inner Mongolia University; 2012