Computer Life (CPL) ISSN: 1819-4818
DELIVERING QUALITY SCIENCE TO THE WORLD

Campus energy use sub-item metrology system theory and method

Junyi Yang [a], Xinran Li [b], Ye Zhang [c], Wenze Jiang [d], Jun Ge [e] and Xiangwei Luo [f]

Chongqing University of Posts and Telecommunications, Chongqing 400065, China

[a]haofnhm960826@163.com, [b]1142190086@qq.com, [c]815034967@qq.com, [d]jwz1998@live.com,

[e]a1186394662@qq.com, [f]1060900859@qq.com

Abstract: This thesis proposes the theory and method of energy-using sub-item measurement system for campus energy, expounds a basic overview of campus building energy consumption, and introduces the design ideas of campus sub-item measurement through campus status analysis and the theoretical results obtained. The dismantling of the technology was carried out, and data collection, data collation, and data analysis of the energy consumption equipment for campus buildings classified by electric energy categories were constructed using theoretical methods. It also clarified the structural conditions of the power distribution system and allowed different architectures for transmission and distribution to be implemented in equipment environments with different characteristics. In the sub-item analysis, the combination of statistics and inferred statistics organically realizes the energy-efficient data processing process of the sub-items, so as to evaluate and analyze the regional energy consumption. This system theory and method will lay the foundation for further building a "sustainable development" energy efficiency monitoring and management system and a comprehensive information-based energy management, control and dispatching system.
Keywords: Sub-item measurement, Campus energy consumption, Measurement conditions

---

1. CAMPUS BUILDING ENERGY CONSUMPTION SITUATION

1.1 Basic Background of Campus

Since the 1990s, universities have played an increasingly important role in environmental management and sustainable development. Since the 11th Five-Year Plan, the government has constantly put forward the "construction of conservation-oriented campuses". Colleges and universities have also been making relevant adjustments based on policies. According to relevant social surveys, the average social energy consumption of university students is four times that of the per capita energy consumption in society. In China, in order to respond to the call and build a "two-type society," domestic universities have made different attempts in different periods. In 2007, Tongji University, in response to the call of the Ministry of Education, first launched a pilot project for a conservation-oriented campus in China, established an energy-saving monitoring and supervision system, established a conservation-oriented campus construction target image, and pragmatically promoted campus energy-saving and emission reduction. Wait for a series of tasks. In

2010, with the knowledge of relevant national departments, the “China Green University Alliance” was initiated with the demonstration project of Tongji University as the core. In the formation of cooperation, communication and sharing systems, the establishment of campus energy efficiency data sharing integrated information channels, integration of domestic various types of information resources and school infrastructure into building resource.

1.2 Campus Energy Consumption Characteristics Analysis

In the distribution of school buildings, the distribution of energy consumption is similar to that of buildings. In recent years, it has tracked and investigated the energy consumption of surrounding buildings and the statistical work of energy conservation supervision. The following four points have been summarized:

(1) The energy consumption of buildings on campus is relatively low

In schools, through the estimation of electricity consumption per unit of buildings in recent years, it can be clearly seen that in addition to the time periods outside the building such as Spring Festival, the energy consumption per unit of buildings on campus is compared with that of national public buildings. And corporate buildings, energy consumption is slightly lower.

(2) Campus energy consumption is mainly for electricity consumption

Since our school installed large-area air conditioners in 2014, the composition of energy consumption on campus has undergone some changes. Before 2014, the energy consumption of the campus was dominated by hydropower. Compared with the average level in the society, water and electricity consumption were higher. The situation of electricity consumption was almost equal to that of social enterprises. Since the installation of air conditioners in 2014, The main energy consumption in the campus is electricity consumption, and the proportion of water energy consumption is small. The majority of dormitory rooms have excess electricity charges, but the water costs are incomplete. Therefore, the school power consumption is still the main energy consumption of the campus.

(3) Classroom centralized power supply, waste of electricity is more serious

The school building is an area where school students study. According to the survey, during the non-final exam review period, there were fewer than ten students in most classrooms in the school, but all lights were on and there was a large area of electricity wastage. Students One of the reasons for this situation is that I prefer to study alone.

(4) The student dormitory consumes more energy, but the energy saving space is small

Schools have carried out relevant controls on the school's power outages, and reasonably defined the time of power cuts. However, due to factors such as the climate in Chongqing, the phenomenon of indoor power consumption is relatively serious, but there is no reasonable way to deal with them.

1.3 Analysis of Campus Building Energy Consumption

Only by understanding the specific conditions and proportions of energy consumption in campus buildings can we reasonably establish a campus energy sub-item measurement system. In addition, a reasonable analysis of the state of building energy consumption in the school should be carried out, and a proper understanding of the structure of the building should be established. Make better decisions on the status quo. At this stage, in the university campus, the main energy consumption

units include teaching buildings, libraries, student dormitories, and public facility lighting. Therefore, it is of great significance to conduct detailed analysis on this.

At this stage, there are a large number of buildings on campus and the number of installed meters is insufficient. If we measure the electricity for all buildings and perform separate metering, the time, cost, and working cost are all It is time consuming and costly. Therefore, this article will specifically measure electricity consumption in campus buildings.

2. INTRODUCTION TO SUB-ITEM MEASUREMENT SYSTEM

For the specific energy consumption of a certain building, according to the transformation of the entire campus building energy consumption measurement system city area, and according to statistical theory in the area to select a representative building or a group of representative To monitor these characteristics of the building, we will use the energy sub-metering technology focused on this project.

2.1 Introduction to Metrology Techniques

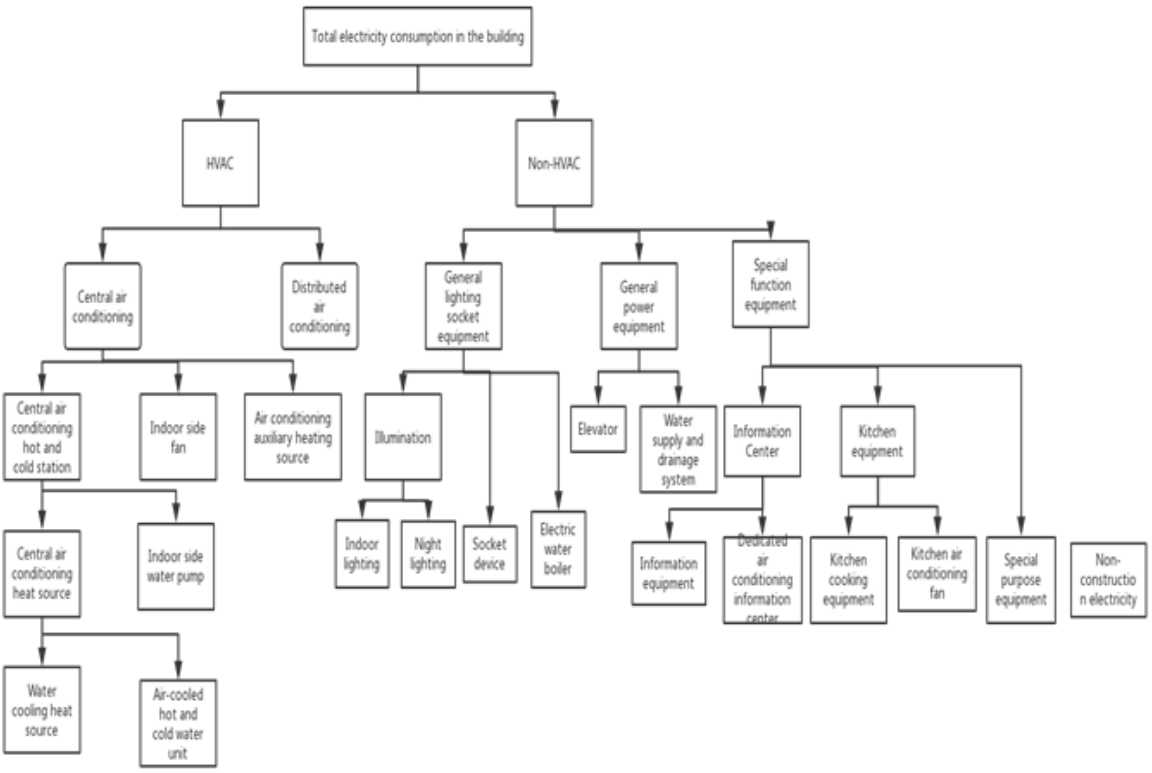

Fig. 1 Electrical Energy Metering Structure Diagram

The energy sub-item measurement system can meet the purpose of energy-saving supervision of campus buildings such as data collection, statistics, monitoring, diagnosis, fixed-rate management, energy-conservation reform and proofreading. The main energy consumption of campus buildings is electrical energy, but the actual electricity consumption of campus buildings is also related to many factors such as climate conditions, conditions of use, occupancy rates, and the efficiency of the use of electrical equipment. Therefore, it is necessary to perform sub-item measurement on each power

consumption link of the campus building, so as to compare the current energy consumption status of the existing buildings with their respective power consumption distribution ratios, identify the differences in the energy consumption of each building, and find the resulting energy. The main factor of consumption, thus, the energy-saving space of campus buildings, see Fig. 1.

The sub-item measurement of electrical energy refers to the technology of classifying the monitoring data of electrical energy consumption equipment according to the nature of electricity consumption, and collecting data, and analyzing and sorting the data. The sub-item measurement technology can collect data related to building energy consumption through data collection and perform sub-item measurement on the data, thus making a preliminary analysis of the power consumption and operating conditions of the equipment in the building, and formulating relevant energy-reduction strategies to make the building More energy-saving features. In the campus, public facilities lighting, air-conditioning systems, and socket systems are all major parts of campus electricity consumption. Generally speaking, as the product lasts for a long time, because the load pressure is too large, there may be situations such as flashing lights, short circuits, and the like. At this time, the sub-item measurement method can be detected and detected in time, and the problem can be solved in time. Reducing the cost of time will be more beneficial to the overall planning of schools.

The main technical points of energy metering can be summarized in four aspects:

(1) Clear measurement

A campus building master list can be regarded as measuring the total power consumption of the entire building. However, it is difficult to accurately specify what electricity load is connected to an electricity branch circuit by installing an electricity meter on an electricity branch. The basis of the sub-item measurement is to conduct a thorough and detailed investigation of the measured branch load and to find out exactly what the load is.

(2) Guaranteed data reliability

Sub-item measurement requires real-time acquisition, long-term continuous transmission of data to the data management center, and then unified summary and analysis. Although current data communication and data transmission technologies have been well-established, it is necessary to solve a series of technical and management problems to truly achieve this task. In terms of technology, the stability of the monitoring object and the reliability of data transmission should be guaranteed. In the present campus building distribution system, most buildings use a multi-channel power supply mode in order to meet the power supply requirements and the related control of the transformer load conditions. As the relationship between the load and the power supply changes, the connection relationship of the circuit is sometimes changed. Failure to notice this condition in time will distort the data. If a power failure occurs, the transmission process will be terminated. Therefore, it must be ensured that the data can be continuously recorded under the conditions of network interruption. This will not result in data errors and will not affect subsequent decisions. In terms of management, the issues detected by the sub-metering systems should be discovered and resolved in a timely manner. Improvements to the existing energy consumption structure will make the “sustainable development” more popular.

(3) Realize the item

The core of the sub-item measurement work lies in “divisions”, that is, the energy consumption of different energy-using systems is measured separately. The “divisional measure” is because we are not satisfied with the study that is only based on the total energy consumption of the entire building, and we hope to further understand the status of each energy-using subsystem. And we are trying to analyze the horizontal comparison and collect the energy use data of each building. Only clear and complete items can be compared. Otherwise there is no meaningful comparison.

Usually there are three ways to actually obtain the sub-item energy consumption data, in which the distribution line is changed and sub-item distribution is achieved. This is the most direct and best way. However, the construction of the distribution system is complex and unpredictable. It is difficult to reform the system model in order to implement sub-item measurement. In different branch roads, the sub-assembly table must be gradually subdivided in order to be more perfect in the new building complex. Implement sub-item measurement. Measuring each meter on a per-use basis and then adding it by category is relatively extreme. If you use this method to achieve sub-items, it will lead to high investment in the system. Not only is the metering investment, but also the connection and data acquisition costs of many nodes will be too high. In many cases, even if this method does not involve investment, the on-site conditions cannot be achieved because the table is not installed. In a certain Chengdu, the electricity consumption data of each sub-branch is measured by direct sub-item, and the load characteristics of each sub-system are used to perform special split calculations to make the power data layer at different time periods and different dates more smooth. Ways to carry on each branch road. In principle, this is a method that cannot be done by itself. Because in the principle of measurement, it is not desirable to make such "estimates." The estimation result is better than the ability of the chaotic connected branch to process data on the premise of the total data remaining unchanged under the load calculation and analysis. At present, a new approach is to install sensors that detect the "on and off" status of various on-off devices, and then use the detected on-off information to assist in split calculations. Studies have shown that combining these switching information with the characteristics of individual loads can already be sufficiently well separated and evaluated to obtain the energy consumption of the details of each branch of the subordinate.

The common points of the above three methods are the need to investigate the distribution system information (branch topology, the type, quantity, and energy consumption characteristics of each branch).

In summary, in the actual application of the sub-item measurement process, the direct sub-item measurement as the main method can be more flexible to deal with a variety of issues, in which the appropriate investment in energy-saving projects to obtain real sub-item measurement energy consumption monitoring data. In actual operation, there are different methods of processing according to different distributed, differentiated and power problems. Generally for power equipment with high power, relatively centralized distribution, and insignificant differentiation, direct metering can be used and integrated power supply configuration schemes can be used to ensure data integrity and reliability. For the low-power, loosely distributed, and differentiated power equipment, a hybrid power supply configuration scheme will be adopted. Indirect metering can be used to calculate the

overall energy consumption data, and various data can be obtained by splitting the data layer. The categories of shared energy consumption data are stratified.

(4) Unified classification description

Because each building is different, the differences in construction and the differences in energy use systems may lead to different forms of energy use. In addition, in solving the problem of unified classification, a model of energy consumption data needs to be established in order to better adjust the relationship between energy efficiency analysis of data feedback aspect comparison and the energy consumption monitoring of the actual situation of campus building energy use, with a unified score. The item model shows the characteristics of campus buildings in different conditions. On the basis of a unified sub-item model, full use of energy consumption data of each campus building, and data feedback vertical and horizontal comparison processing, is more conducive to the development of campus public building energy consumption statistics.

According to investigations, energy-saving priorities of school office buildings, administrative buildings, laboratories, and libraries are mainly focused on office lighting outlets and split-unit air-conditioning. The energy-saving focus of student dormitories and teaching buildings is mainly on lighting.

2.2 Theoretical Analysis of Distribution System Structure

One hardware facility for campus building energy consumption is mainly from transformers to primary branch power distribution cabinets. In the use of two types of power distribution connection modes, different transmissions are distributed to different function distribution boxes, achieving different characteristics. Field equipment supplements. The current distribution and transmission connection mechanism is divided into two types:

(1) Gradually transfer from a high-level power distribution cabinet to a low-level power distribution cabinet, and gradually connect it to a power distribution box, use the form of a distribution box, transmit and connect to a high-power device, thereby providing high power The normal operation of the equipment.

(2) Directly connected from the distribution circuit of the primary branch to the distribution board distributed on each floor in the building, passing through the distribution box through the distribution box, and transmitting and connecting to the low-power equipment with a large number of bases and small power wattage. As a result, the power consumption of lighting, sockets, etc. for low-power equipment is increased.

The broad application of the rotary kilns in a variety of industrial branches for thermal processing of residual materials with a different origin and mostly for fire treatment of hazardous wastes [2-3]. The rotary kilns were used as rotary dryer to remove moisture and water from solid substances, primarily by introducing hot gases into a cylinder, it act as a conveying device and stirrer.

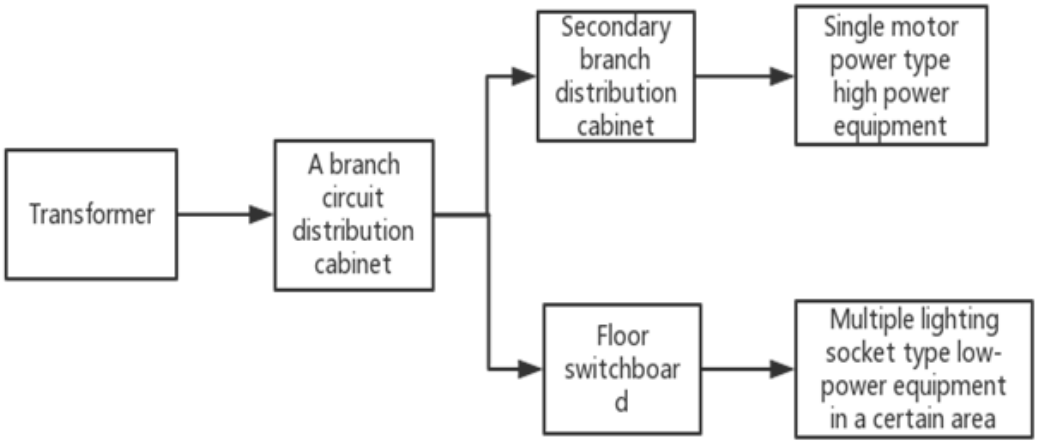

Fig. 2 Distribution diagram

Known from the above figure, in the campus environment construction, in the campus buildings with large volume, intractable data volume, and complex distribution system, usually 60 to 80 power distribution cabinets need to be built, even influenced by external factors, such as , economic feasibility, site conditions, policy support and other factors, it is impossible to install a complete sub-metering device, so this involves the theory of sub-item energy consumption measurement methods.

3. LITERATURE REFERENCES

3.1 Metrology Conditions Analysis

Different buildings and buildings on campus have corresponding functional features, they have common and specific features. For example, the functional features of the experimental building are mainly based on experimental equipment, and the functional features of the teaching building and student dormitory are mainly lighting and air conditioning. We divide the area according to the functional characteristics of different buildings and buildings, and combine the commonalities to find out the corresponding laws. Through the data obtained, according to the statistical theory of technology. For example, the theory of set theory involved in statistics refers to splitting the target data into several valid sets and using a series of set methods to find out the rules between them. Furthermore, using mathematical models, the data can be effectively displayed, so that the data can be visualized and regularized. The energy consumption statistics are based on the regional campus buildings. According to the energy consumption data of large buildings in the campus sub-region, statistics, processing, and analysis are performed, and then the output of energy-generating large buildings in this region is reported.

The key point in the sub-item measurement process is the energy consumption data processing process. We have mentioned above how to achieve reliable data in sub-item measurement. We will not mention here anymore. We can rely on software to support so much data. Tools, consider data processing through VB. According to the results of the data, the corresponding mathematical

relations are obtained statistically. Create a mathematical model. Our goal is to better analyze the data and study the law. Do a reasonable analysis of energy consumption, and ultimately achieve energy-saving emission reduction. Of course, under certain conditions, it is also possible not to use the form of data modeling, and to analyze the results by combining statistics described in statistics with inferred statistics.

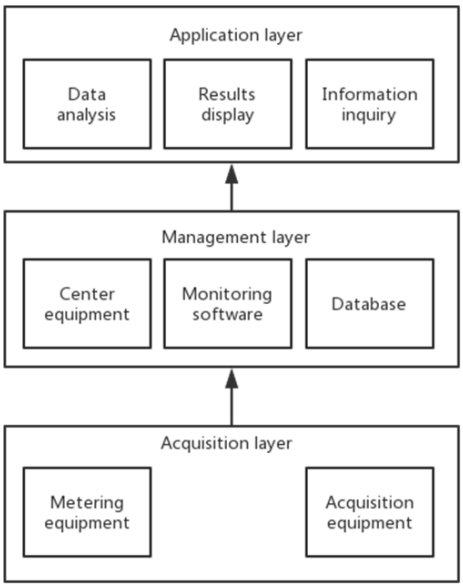

Fig. 3 Component Measurement and Monitoring System Structure Framework

3.2 Metrology Theory

The energy consumption data that we can collect in real life is limited, and only some energy consumption data can be collected. However, in order to obtain the total energy consumption data of the entire campus, we need to analyze the energy consumption data of a region and promote the results. To the whole school. We assume that this method of estimating energy consumption is feasible, and then we need to analyze the errors. This article will use statistical methods to solve this error problem:

Set the overall energy consumption of the campus to be E, E is a subset. According to the campus sub-regions, the sub-regions are merged into subgroups of E.

Energy consumption E_i collection:

$E_i \in E$ (i=1,2,...n)

The energy consumption of a single-use building is the integration of the energy consumption e_i of the sub-region where it is located:

$e_i \in e$ (i=1,2,...n)

At the same time, the integration of electricity consumption in each building of the campus is the overall energy consumption of campus buildings:

$e \in E$

In this method, there is a series of sub-sets e about the energy consumption of individual buildings in the total energy consumption set E for building electricity consumption on campus as a whole:

$e \subseteq E$

So under this technical theory, there are the following relationships between special sets:

$X_e \subseteq X_E$

Based on the above analysis, it is assumed that we can obtain a subset X_e of the total energy consumption X_E. This subset is used as a representative X_e of the total energy consumption X_E, and this represents the total energy used by X_e. Consumption of all features of X_E. By analyzing this representative X_e, we can derive the data characteristics of the total energy consumption X_E of the campus building based on the representative X_e of the total energy consumption of the electricity, and then use the statistical relationship between the data represented by different regions to pass the statistics. Theory of learning gives the degree of error.

After improving the statistical data model for energy consumption on campus across the sub-region, we use a series of computer technologies and knowledge to solve the problem. According to the already-divided campus area, the total amount of electricity consumed and the corresponding area has a partition. After the feature quantity, these data are finally input to the established computer data model one after another. By running a computer data model, we can get campus sub-regional energy metering results and data errors. Finally, the degree of error calculated by this method is obtained.

4. CONCLUSION

In the theory and method of campus sub-item measurement, this paper first analyzes and constructs the energy consumption situation of the whole campus, and understands the distributed status quo of the complexity and difficulty of the entire campus energy consumption. Under the system of sub-item measurement, the technical advantages of the sub-metering system were highlighted, the structure of the sub-item distribution power distribution model was described, and the overall analysis and measurement system was described. Based on the theoretical basis of measurement conditions, a sub-regional division method was proposed to improve the data model of energy consumption statistics, which reduced the overall analysis and measurement error. The method of system theory has played a certain theoretical evaluation role for the construction of data splitting and the construction of a sub-item measurement system platform.

ACKNOWLEDGEMENTS

The work of this article is done under the meticulous guidance of Professor Luo. This article from the topic of the topic, to the overall design of the program and the writing and review of the paper, all fused Professor Luo's efforts, hereby express my sincere gratitude to Professor Luo and the most sincere respect!

Thanks Chongqing University of Posts and Telecommunications for giving us this platform for learning so that everyone can come together to learn and discuss. Thanks to the care and support of the new air team brothers and sisters, mutual encouragement in learning, mutual help in life. All these will become a valuable asset in my life. In the future work and life, I will devote 100% enthusiasm and make achievements in the research field.

REFERENCES

[1] Rojali, Salman A G. Reversible Data Hiding Technique on Jpeg Image By Quad-Tree Segmentation and Histogram Shifting Method Based On Android[J]. Procedia Computer Science, 2015, 59:530-539.

[2] Design of Embeded Remote Image Monitoring System Based on STM32[J]. Industrial Control Computer, 2016.

[3] Kaseridis D, Iqbal M F, John L K. Cache Friendliness-Aware Management of Shared Last-Level Caches for High Performance Multi-Core Systems[J]. IEEE Transactions on Computers, 2014, 63(4): 874-887.

[4] Mills E. Action-oriented Benchmarking: Using the CEUS Database to Benchmark Commercial Buildings in California[J]. Energy Engineering, 2008, 105(Fall 2008): 6-18.