Computer Life (CPL) ISSN: 1819-4818
DELIVERING QUALITY SCIENCE TO THE WORLD

Design of Control system for Badminton Line Robot

Hui Wang [a], Xinwei Gan [b], Mengquan Shang [c]

School of Mechanical and Electronic Engineering, Shan Dong University of Science and Technology,

Qing dao 266590, China.

[a]2575429605@qq.com,[b]923597420@qq.com, [c]1643745559@qq.com

---

Abstract: In order to improve the badminton amateur game, due to the lack of a referee system, there is often the problem of sidelined balls. This paper proposes a badminton line robot that can replace the human eye. The robot is mainly composed of a laser beam sensor and an acousto-optic alarm device. The design principle of the line robot is that after the badminton sphere blocks the laser beam emitted by the laser emitting device, the sphere reflects back a laser pulse signal to the laser receiving device and transmits the low-frequency electric signal to the acousto-optic indicator after being amplified and transmitted to the decoder. Device, alarm function. Applying the line robot in the game can effectively avoid the emergence of borderline balls. The robot's control system principle is relatively simple, the production cost is low, and the work performance is good. It can also be used in other fields such as tennis matches.
Keywords: control system, laser, alarm, badminton.

---

1. INTRODUCTION

1.1 Research meaning

Punishment in the badminton game line is prone to misjudgment, and misjudgment will cause normal play of the greater emotional change of both players. The main causes of misjudgment of divisions are: (1) Badminton has a small head and a small contact area with the ground; (2) Badminton is grounded at high speed, and the contact point between the ball and the ground is difficult to observe with the naked eye; (3) Badminton landing without direction. The above reasons will cause the referee to use eye fatigue, so that the game penalty appears error. Human judgment with the naked eye has a strong subjectivity, and people's attention and observation and judgment ability are limited.
Therefore, the research and design of a flexible, accurate, and efficient Badminton Division line robot fundamentally solves the problem of division line misjudgment in the badminton game.

1.2 Research status at home and abroad

At present, according to the development status quo at home and abroad, the division line system that can be used to assist the referee to objectively judge the penalty mainly includes the Hawkeye system, which is also called the instantaneous playback system, the line examination auxiliary device, and the

piezoelectric sensing technology, among which the Hawkeye, the system is the most used referee assist system in ball games.

The Hawkeye system, which is mainly used in tennis matches, is also called Instant Replay System. The Hawkeye system consists of high-speed cameras, computers, and large screens. With multiple high-speed cameras evenly distributed around the site, the motion of the spheres captured by the high-speed camera is transmitted to the computer connected to it. The computer calculates and analyzes the speed, direction of movement, and coordinates of a certain point on the sphere, and establishes a mathematical model to obtain the trajectory and landing point image of the sphere in the air. In the end, the trajectory of the sphere movement is clearly displayed on the big screen. Because this system is expensive, it can only be used on the critical ball penalty, and each athlete can only have 3 chances to challenge. It can not be popularized in badminton competition.

Line review aids are used more often in ball games. The working principle of the auxiliary device is to change the material of the game ball and the playing field boundary. When the badminton and the court boundary collide, the device will generate an electric signal to correctly position the ball's landing position. However, there are many deficiencies in the auxiliary device: (1) The change of the ball material of the game will change the basic structure of the ball, so that the ball's trajectory will change more or less; (2) There are many spectators in the badminton stadium, so that the water content in the air increases, the accuracy of the auxiliary device will be seriously disturbed by static electricity; (3) The drops of sweat that athletes produce in the game fall to the boundaries of the venue, which has a greater impact on the judgment of the auxiliary device. Therefore, it is unlikely that the line review assistant system will be used in badminton competitions.

Piezoelectric sensor technology is a kind of assistant method that is popular nowadays. The principle of the piezoelectric effect is that if a pressure is applied to a piezoelectric material, it generates a potential difference, whereas if a voltage is applied, a mechanical stress is generated. If the pressure is a high-frequency vibration, high-frequency currents are generated. When high-frequency electric signals are applied to piezoelectric ceramics, high-frequency acoustic signals are generated. This is what we usually call ultrasonic signals. Piezoelectric sensors were developed based on the piezoelectric effect, and the conditions under which they act are due to a large impact force and are therefore difficult to apply in badminton games.

1.3 The main research content

In order to solve the problem of more misjudgments in the badminton division, this paper uses laser sensor technology to research and design an objective, accurate and reliable Badminton Division robot. The core part of the robot is a laser sensor and an alarm device. When the badminton falls on the boundary line and blocks the laser beam between the laser emitting device and the laser receiving device, the laser receiving device generates a signal to the acousto-optic indicating circuit to make the alarm respond.

2. WORKING PRINCIPLE

The control system of the badminton line robot designed in this paper is mainly composed of laser induction technology, signal transmission and single chip microcomputer control. The light signal is converted into a voltage signal, and the voltage signal is transmitted to the controller for processing. When the badminton line is pressed, the alarm is driven to alarm.

3. STRUCTURE OF THE CONTROL SYSTEM

3.1 Laser radiation sensor transmitter circuit

When designing a laser emitting system, the simplest circuit is used as far as possible to complete the corresponding function. According to the working principle of the division line robot. The designed laser transmission circuit is shown in Figure 3.1. Four CD4011 laser transmitters were selected and the CD4011 was a 2-input NAND gate. When the two inputs have an input of 0, the output is 1; when the input is 1, the output is 0; when both inputs are 0, the output is 1.

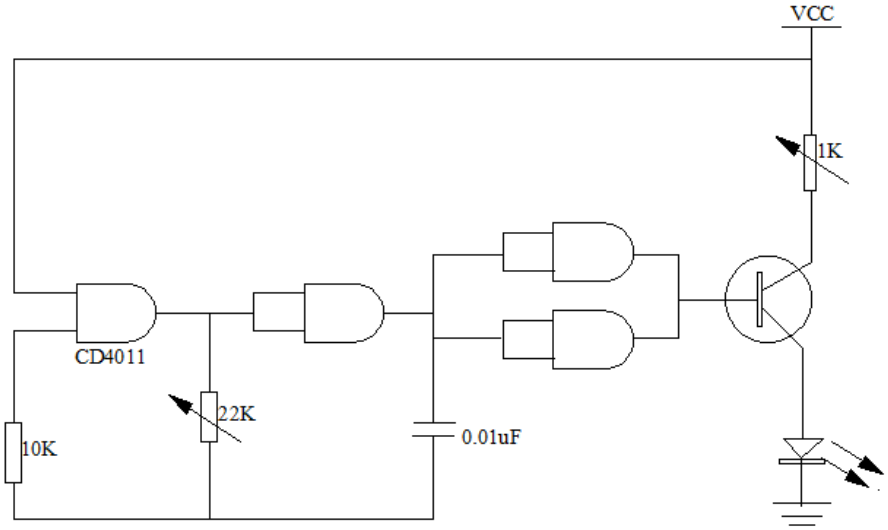

Figure 3.1. Laser transmitter circuit

The laser-on-radiation sensor launcher uses a 10-30V powered M12 laser diode. The M12 laser diode has the characteristics of small laser beam emission angle, concentrated beam, and strong unit beam energy. The power density of the target receiving laser beam is several times that of the infrared LED beam, and thus it can work normally in a stadium with high humidity. Guaranteed extremely high work efficiency. The main technical parameters are shown in Table 3.1.

Table 3.1. Technical parameters of 12-mm laser diode for 10-30V power supply

diode specifications	numerical value
diameter /mm	12
wavelength /mm	650
power /mw	5
beam divergence angle	＜6°
operating voltage /V	10-30
working current /mA	< 50
operating temperature /℃	-25℃ - + 55℃
life span	> 1000h

3.2 Laser radiation sensor receiving circuit

The receiving circuit of the laser-on-radiation sensor is shown in Figure 3.2. The laser receiving circuit is mainly composed of infrared light-electric conversion probes, amplifiers, and decoders. The same type of laser emitting tube and laser receiving tube can be used in normal applications. When the laser beam emitted by the emitting tube is blocked by the badminton sphere, the sphere reflects a

laser pulse signal back to the laser receiving tube and passes the amplifier amplification processing to the decoding. Device. Finally, the laser receiver circuit delivers a low electrical signal. The signal is received by the acousto-optic indicating circuit and the alarm responds.

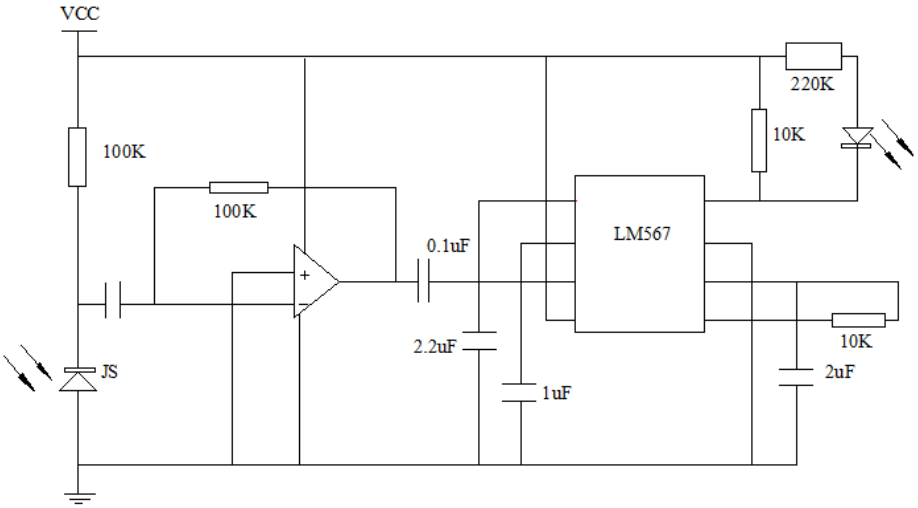

Figure 3.2. Laser beam sensor receiving circuit

The receiving device of the laser radiation sensor adopts an M12 receiving tube matched with the transmitting device. M12 receiving tube has the advantages of strong anti-interference ability, responsiveness and long working hours. The main technical parameters are shown in Table 2.2.

Table 3.2. Receiver Technical Parameters

diode specifications	technical parameters
diameter /mm	12
power /mw	5
beam divergence angle	< ±8°
operating voltage /V	10-30
working current /mA	< 45
operating temperature /℃	-25℃ - + 55℃
life span	> 1000h

3.3 Sound and light in dicating circuit

Because this design is used in the badminton game field, the noise and light in the game site are relatively messy, so the sound and light intensity emitted by the sound and light alarm must be relatively large. Therefore, BC-809 acousto-optic alarm is used. This alarm is a device that simultaneously displays flashlights and horns. With the advantages of low price, small size, light weight, high brightness flash and long standby time, the flash lamp is made of pulsed xenon lamp tubes and the sound is generated using piezoelectric speakers. The main technical parameters of the sound and light alarm BC-809 are shown in Table 3.3.

Table 3.3. Technical parameters of BC-809 sound and light alarm

technical parameters	technical parameters
operating Voltage /V	24-30
power frequency /Hz	50-60
power /W	30

Alarm circuit is mainly composed of sound and light alarms, relays, 8050 triodes and other components. The 8050 triode base input current determines the magnitude of the base load, because the relay's pull-in current is 40mA, and the triode's amplification factor is 90, so the base current: I=40mA/90=0.44mA. In order to make the relay work stable, the actual base current should be calculated to be worth more than 2 times, its resistance value is R=4.3V/0.88mA=4.88K, and the base resistance value is 5K. The alarm circuit is shown in Figure 3.3.

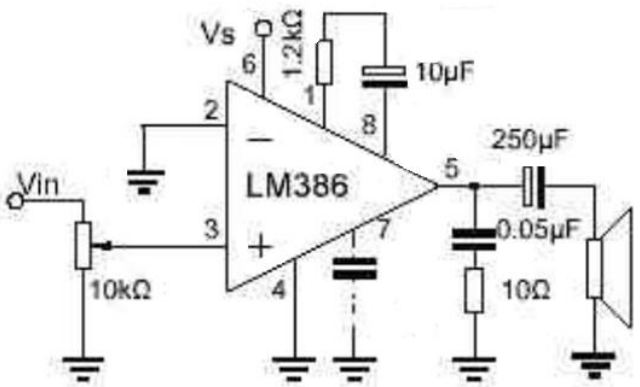

Figure 3.3. Alarm Circuit

4. DATA PROCESSING AND SIGNAL TRANSMISSION

When the badminton pressure line,the single-chip microcomputer 1 (see Figure 4.1) in the laser receiver circuit receives a pulse signal. The counter starts to work, when P0.0 receives a high-level pulse within a certain time range, it is calculated. Setting the count range from 4 to 2500 corresponds to the speed at which the ball is dropped in a badminton game. When a high level is received in this time range, a data signal is sent from the serial port to the microcontroller 2 (see Figure 4.2). Because the time that people step on the line during exercise is obviously longer than the ball pressure line. The high-level pulse output from the pressure line comparator of the customer is not within the set counting range, thereby avoiding the misjudgment caused by the non-ball pressure line.

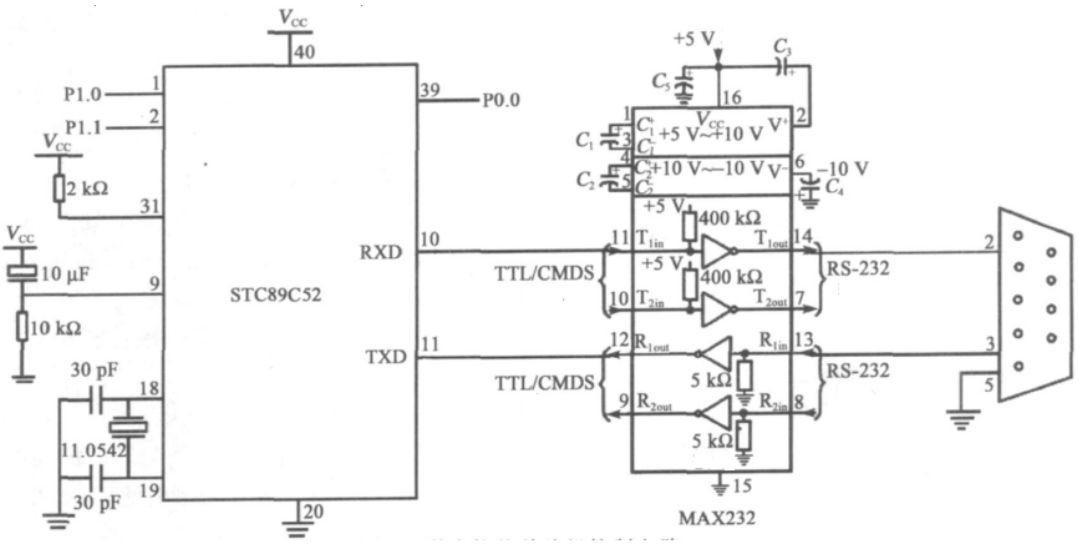

Figure 4.1. Laser Receiver Microcontroller Control Circuit

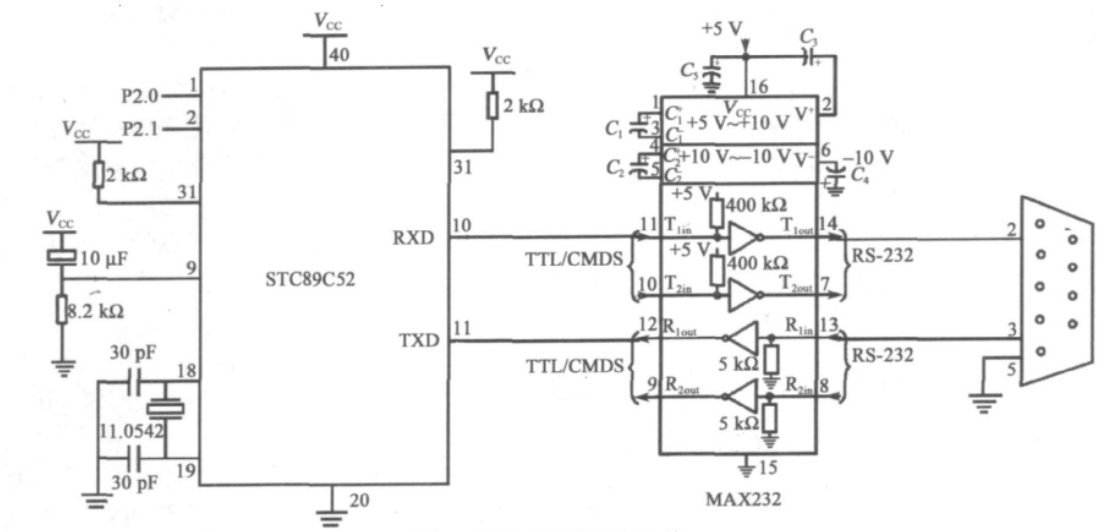

Figure 4.2. Alarm Microcontroller Control Circuit

5. SUMMARY

This article mainly studies and designs the control system of the Badminton Division robot. The control system mainly uses laser induction technology and signal transmission technology. Including laser radiation sensor and acousto-optic alarm alarm device in two parts. The laser beam sensor adopts the M12 model, and the laser beam has strong penetration and quick response. The acousto-optic warning device uses a BC-809 acousto-optic alarm. It integrates the horn and the light, and it is small, light and loud.

The Badminton Division Robot designed and researched in this paper has many advantages compared to traditional ball referee assistance systems: (1) the principle of structure and application is simple, and problems can be solved by themselves. (2) High reliability, less affected by external environmental factors. (3) The manufacturing cost is low, badminton lovers can afford it, and can be widely promoted.

REFERENCES

[1] Qi Feng. Discussion on the application of "Eagle Eye" technique in tennis game [J]. Journal of Jilin Institute of Physical Education. 2008.24.55∽58

[2] Chen Xiaoxia. Application and Analysis of Hawkeye Technology in Badminton Competition [J]. Sports Training. 2016.08.15∽17

[3] Tong Jingping, Yang Shoumin. Design and Implementation of Badminton Doubles Suspension Assistant System Based on VB6.0 [J]. Anhui Sports Science and Technology. 2009.03.44∽47

[4] SU Zhenyang, SHAO Xiaopeng, ZHANG Shaohui. Research on line assist system for badminton based on machine vision [J]. Department of Physical Education, Xidian University. 2009.06.133.44∽47

[5] Han Xin. Application of "Eagle Eye" Technology in Badminton Competition [J]. Information and Computers. 2015.17.132∽134

[6] Wang Guangyan. Security warning system design based on infrared radiation technology [J]. Research and development. 2014.8.178 ∽ 181

[7] Wang Mei. Tennis Electronic Line System [J]. Scientific Research Development. 2013.02.118∽120

[8] Wu Donghai. Application and prospect of Hawkeye technology in badminton referee [J]. Department of Physical Education, School of Education, Zhongshan University. 2007.08.256∽260

[9] Chen Xiaoyu. Research and design of a new type of optical tennis line instrument [J]. Piezoelectrics & Acoustooptics. 2011.13.364∽367

[10] Hu Guitong. Research on key technologies of objective aided referee system for fiber array badminton [J]. Henan Academy of Sciences. 2005.03.234∽240