Computer Life (CPL) ISSN: 1819-4818
DELIVERING QUALITY SCIENCE TO THE WORLD

Design of ultrasonic wind speed sensor in coal mine

Longbing Liang [a], Jie Song [b], Lingling Gu [c]

Jiangsu Vocatioal College of business, Nantong, 226011, China.

[a]807193907@qq.com,[b]123857099@qq.com, [c]76462456@qq.com

Abstract: Aiming at the problem of ventilation underground accidents caused by the design of wind speed sensor in mine, high precision, low power consumption, diversity of output, the system is based on the principle of ultrasonic vortex, the hardware with STC80C52AD as the controller, the realization of the local wind speed display, infrared remote control and remote transmission diversity. Through field test, the wind speed actual value to be close to linear relation with the sampling value, but the small wind speed larger deviations occur, therefore study the nonlinear compensation algorithm to reduce the measurement error.

---

1. INTRODUCTION

Gas accident is a major disaster in state-owned coal mines, which accounts for a large proportion of large and especially serious underground accidents. At present, 40% high gas mine has not set up a gas drainage system, and 15% of the capacity bottleneck of the state owned coal mine is ventilation system problem, and most of the state-owned local coal mine ventilation systems have problems. In the process of automatic detection of harmful gas in the underground, the wind speed and air volume are one of the most important parameters. The National Coal Mine Safety Supervision Bureau has clearly put forward that the coal mining should be based on the principle of "first pumping after mining, monitoring and monitoring, and using wind to produce" , to grasp the change of wind speed and air volume in time, and to prevent accidents. It is of great significance to increase the output of coal.

The underground safety is increased, and the downhole equipment is required to accurately transmit the downhole data in time. However, the traditional methods of measuring wind speed and air volume often have some problems, such as low accuracy, high cost, single interface, poor stability of the system and so on. At the same time, control the downwind speed and air volume of the well in real time, and prevent the downhole ventilation from being ventilated. The gas accident caused by profit also has an urgent role. This is urgently required to design a wind speed sensor which can adapt to the underground conditions, and is accurate, reliable and durable. Based on the above problems and past methods of measuring wind speed and air volume, this paper designs an ultrasonic wind speed sensor with low cost, high precision and high stability. The system can provide real-time and accurate data of the downhole wind speed and wind volume, make the downhole well receive data synchronously, set

the remote control, the diversity output interface is easy to access the sensor and base station, and greatly reduce the downhole accidents caused by the ventilation problem.

2. THE WORKING PRINCIPLE OF THE WIND SPEED SENSOR

This design uses ultrasonic transducers to obtain wind speed. As shown in Figure 1, a vortex generator (block) is set between the transducer transducer of the wind speed sensor. When the flow air passes through the vortex generating rod, two internal rotating whirls are generated below it. Because the vortex is blocking the ultrasonic wave, the ultrasonic transducer will receive the ultrasonic intensity changing with the vortex frequency. When the vortex does not block the ultrasonic wave, the ultrasonic intensity is maximum. When the vortex is just blocking the ultrasonic wave, the ultrasonic intensity is the smallest. The frequency signal received by the ultrasonic transducer is sent to the frequency / voltage conversion module and converted into voltage. The two is linear proportional relation, that is, the linear proportional relationship between the voltage and the wind speed.

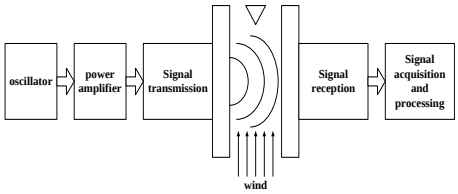

Fig.1 Principle of ultrasonic transmitting and receiving

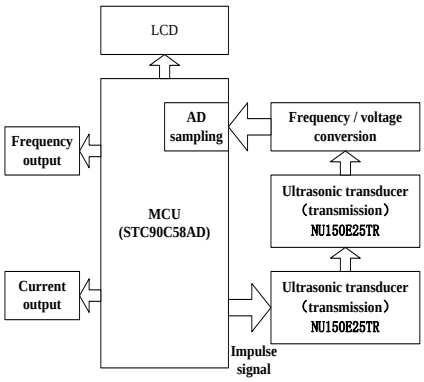

Fig.2 Wind measurement system structure

This design uses STC90C58AD chip as the main control module. The STC90C58AD chip has 0-40MHz operating frequency range, EEPROM and watchdog functions, 3 16 bit timing / counters, 8 Channel 10 bit AD sampling and conversion.

As shown in Figure 2, the system consists of the ultrasonic signal transmitting / receiving module, the frequency / voltage conversion module, the output module, the watchdog module, the infrared remote control module and the LCD module. Through the signal transmission module, the ultrasonic transducer 1 is stimulated to transmit the ultrasonic signal, and the ultrasonic transducer 2 will receive the ultrasonic signal with the change of the vortex frequency and send the signal into the frequency / voltage conversion module. After converting it into the corresponding voltage, the ultrasonic transducer will be sent to the single chip computer for AD sampling, and finally the single chip processor is processed. Single chip come true outputing wind speed and air volume, and realizing

various output such as frequency and current output. It can also realize infrared remote control and diversiform remote transmission.

3. HARDWARE DESIGN OF ULTRASONIC WIND SPEED SENSOR

3.1 Ultrasonic signal transmission module

The transmission module of the ultrasonic signal is divided into the transmission pulse circuit, the amplifier and the ultrasonic transducer. The signal is generated by the transmission pulse. The signal is amplified by the amplifier and the signal is sent out by the ultrasonic annulus. The most important part of the signal is the emission pulse circuit, and the following will be detailed.

The transducer used in this module is NU150E25TR. Its diameter is 25mm and the center frequency is about 150 KHz. It has the advantages of small size, light weight, high sensitivity and high sound pressure, high reliability and low power consumption.

The main chip used in the transmitting pulse generation circuit is CD4060. Since the transducer needs to be excited by the center frequency of 150 KHz, the 4.8MHz oscillator should be at least 32 frequency division. The center frequency of ultrasonic emission is output from pin 5 (32 frequency output) of CD4060BE and transmitted to ultrasonic transducer.

3.2 Signal acquisition and processing module

As shown in Figure 3, the signal acquisition and processing module mainly includes two parts: signal reception and frequency / voltage conversion.

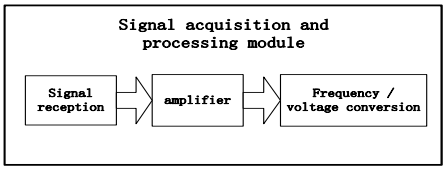

Fig.3 Signal acquisition and processing module

The reception of the signal is amplified by the two stage amplifier composed of two triode tubes, and then filtered by the filter capacitor, that is, a sinusoidal signal with a frequency of about 150 KHz is obtained, and the receiving signal will be transmitted to the frequency / voltage conversion module for processing.

The frequency / voltage conversion circuit is a very important part of this design. The main chip used in this module is LM2917. The frequency returned by the ultrasonic transducer is converted into voltage, which is used for calculating the wind speed of the single chip microcomputer.

After the frequency / voltage conversion circuit part, the ultrasonic frequency is converted to the voltage signal, and AD sampling is carried out in STC90C58AD.

3.3 Ultrasonic wind speed sensor output and peripheral module

After the main chip is processed, the system will output various real-time data, including frequency output, current output, RS485 output, infrared remote control and so on.

Frequency output: the main chip used in the frequency output module is AD537H. After passing through the chip and its peripheral circuit, a voltage can get a frequency signal proportional to the input pressure. Current output: the main components in the circuit are the operational amplifiers LM324 and transistors and other auxiliary components, which can realize the output of the current.

RS485 output: This module mainly uses ADM287 as the main control chip. The ADM2587 contains an integrated isolated DC/DC power supply, which eliminates the need for external DC/DC isolation modules. The input signal is output through the chip in the form of RS485. Infrared remote control module and watchdog module: the infrared remote control module is mainly used to input the value of the roadway cross section area to the single chip microcomputer. The wind speed and the area of the tunnel are calculated, and the remote control distance is more than 6m. The doorway module ensures that the system will not cause failures due to software problems.

4. SOFTWARE DESIGN OF WIND MEASUREMENT SYSTEME

In terms of software, it is mainly to realize the writing of the above hardware modules. Specifically, the design of infrared remote control, overrun early warning and so on. The threshold value of wind speed and volume can be set by using the design of overrun early warning.

The software design adopts the top-down design plan, planning various functional modules, and delineate a clear hierarchical structure. The specific driver is shown in Figure 5.

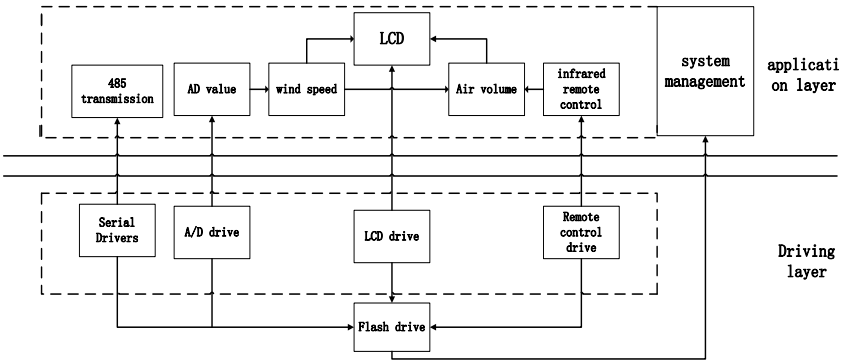

Fig.5 Overall software structure scheme

The flow chart of its specific software programming is shown in Figure 6.

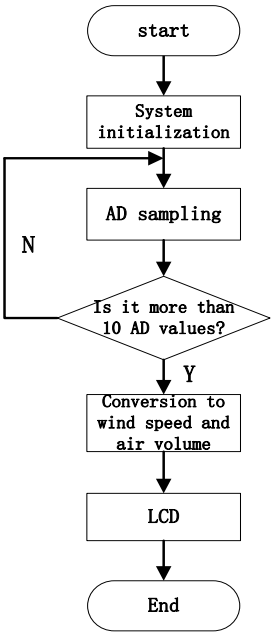

Fig. 6 Flow chart of software system

5. RESEARCH ON COMPENSATION ALGORITH

5.1 Test and analysis of system

The main environmental wind tunnels and other standard wind measuring instruments are tested. The wind tunnel of the test is located in the space closed workshop, the outside disturbance is small, the wind speed range of the air transmission equipment can be 0-18m/s, and the wind measuring reference instrument is the Taiwan Taishi wind meter. Field verification shows that when the wind turbine is not started, the wind speed is almost 0m/s, thus ensuring the accuracy of the data obtained in the wind measurement environment.

It is known from the previous article that the principle of this design is the linear relationship between the wind speed and the frequency of the ultrasonic wave. The frequency of the ultrasonic wave is converted to the corresponding AD value, and the wind speed is obtained by the linear relationship between the AD value and the wind speed. But in the measured data, the relationship between the two is not absolutely linear.

So in the measurement, we only need to display the AD value first in the liquid crystal display interface of the wind measurement system, and record the wind speed displayed by the Thailand wind meter at the same time. Based on the calculation of the single chip computer and using the compensation algorithm, we have done the approximation in the engineering, and made the fitting with the fold line.

5.2 Research on compensation algorithm

The commonly used fitting algorithms are linear least square fitting, the nearest difference value and the equal strip difference, and so on, because the wind speed is linear with the theoretical value of the voltage, and the above algorithms exist or have a large span or a large error. After the success of the hardware and software design, the algorithm analyses the cause of the error through the field measurement of wind speed, and the influence of the space and angle of the wind speed sensor on the measurement error. Therefore, this design uses nonlinear compensation algorithm and spatial fitting to reduce errors.

Through measurement and comparison, the curve fitting method is used to synthesize the broken line by measuring a large number of discrete wind speed points, and the approximate position of the inflection point of the convex part is found through the measurement. The middle point of the fold compensation is located at this point, and the other two points can be set in the range of quantity that is easier to reach at the production site, because the two sides of the folded line can be extended to calculate. Then the segments are represented by linear equations, and then implemented by a simple program.

On the basis of the application of the ultrasonic wind speed and wind direction measurement technology, the corresponding relationship between the measurement error and the space angle is determined by the method of space measurement, and the one-way fitting compensation calculation and the space fitting compensation calculation are carried out.

After the compensation algorithm is processed, the relationship between AD value and wind speed is obtained, as shown in Figure 7.

After comparing the real time data with the theoretical data, we can control the error within 0.1m/s. Thus, it can be seen that the linear compensation algorithm plays a very important role in reducing the error.

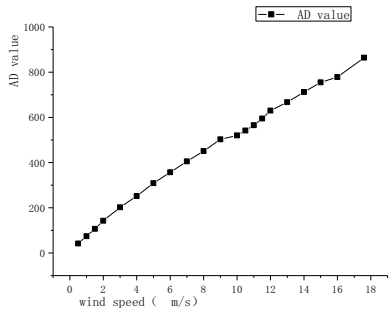

Fig.7 Relation diagram of wind speed and AD value

6. EPILOGUE

The design realizes infrared intelligent remote control design, and the diversity output interface facilitates the access of sensors and base stations, and reduces the algorithm of measuring errors. This paper explains the design method of the wind measurement system from the aspects of hardware, software and error reduction. On the basis of measuring a large amount of data, the multi-line compensation algorithm is used to reduce the wind speed error. The error can be reduced to less than 0.1m/s, and it is of high practical value.

REFERENCES

[1] National Coal Mine Safety Supervision Bureau. Fifty experience in coal mine gas control. Beijing: Coal Industry Press, 2005.1-5

[2] Xie Fang, Li Changqing, Zhang Jianbin, ultrasonic vortex wind speed sensor research, coal mining machinery 2006 (5): 21-37

[3] Jingjiang, Tang Qishan. Design of EIA-485 interface module for wind speed and wind speed sensor [J]. Meteorological hydrological oceanographic instrument, 2004 (3): 41-44.

[4] Fang Li. Maintenance and troubleshooting of wind direction and velocity sensors [J]. Meteorological hydrological oceanographic instruments, 2008 (4): 76-77.

[5] Chen Dan, Zheng Zengwei, Li Ji Jun. Overview of research on wireless sensor networks [J]. computer measurem ent and control, 2004,12 (8): 701-704

[6] Sun Jiping. Revision of sensor settings for coal mine safety regulations [J]. Automation of industrial and mining, 2014, 40 (5): 1-6.

[7] Kenneth Ma, Li Chengrong, Chiang Jian, et al. Development of fiber Bragg grating wind speed sensor for overhead transmission line ice monitoring and monitoring [J]. Journal of electrical engineering, 2011, 31 (13): 128-134.

[8] Liang Ying, Tong Chuan. Design of single chip microcomputer system based on FPGA's equal precision frequency meter, [J]. software, 2012,49 (13): 15-19

[9] Wang Rulin. Mine environment sensor technology. Beijing: China University of Mining and Technology press, 1998.22-45

[10] Su Jiping. Mine safety monitoring system. Beijing: Coal Industry Press, 2004. 1-43