Computer Life (CPL) ISSN: 1819-4818
DELIVERING QUALITY SCIENCE TO THE WORLD

One Intelligent Unloading Control Protection Device Applied to Small-scale Wind Power Generation System

Qifei Du [a], Jijie Zhang

[1]National Demonstration Center for Experimental Engineering Training Education, Tianjin Polytechnic University, Tianjin 300387, China

[2]Key Laboratory of Smart Grid of Ministry of Education, Tianjin University, Tianjin 300072, China

[a]Duqifei2010·163.com

Abstract: The traditional unloading device causes large fluctuations in the DC side voltage, which reduces the energy utilization ratio and limits the promotion and application of small-scale wind power generation systems. In allusion to existing problems in the traditional unloading device, this paper has carried out improved design of the circuit structure and control strategy, studies and designs one unloading control and protection device that can realize intelligent work. Through the analysis of the experimental results, the intelligent unloading control protection device can realize the real-time linear control unloading resistance operation in accordance with the DC side voltage level, achieves the intelligent unloading control, improve the energy utilization ratio, it is of great practical significance to promote small-scale wind power generation systems and make full use of renewable clean energy.
Keywords: wind power; intelligent unloading; utilization ratio.

---

1. INTRODUCTION

With the rapid development of society and economy, due to energy shortage, environmental pollution and rapid growth of power demand, energy problem are receiving more and more attention in today's society, wind energy as a renewable, clean and environmentally friendly green energy source, its development and utilization has attracted more and more people's attention.

At present, the main utilization form of wind energy is the way in which large and medium-sized wind power is connected to the grid. Most of the places suitable for the construction and operation of medium and large-scale wind power plant are remote areas, islands and even seas with poor natural environmental conditions, which have extremely strict requirements for the reliability and stability of wind power set. Since the small-scale wind power generation system can operate efficiently within a large wind speed range, and the direct-drive permanent magnet synchronous generator is often used, the speed-transformation is omitted, and the power generation efficiency is greatly improved.

Small-scale wind power generation systems have become an important development direction in new energy power generation with more economical, convenient and practical features.

At present, the topological structure which small-scale wind power generation systems is often used: uncontrollable rectification, DC/DC transfer circuit, and full-bridge inverter circuit. Because direct-drive permanent magnet synchronous generator is often used, there is no speed regulation device, the output voltage is unstable, and it is unfavorable to the improvement of overall performance of the system, makes the wind speed range suitable for small-scale wind power generation systems narrow. If the output voltage of generator is too high and there are no necessary protective measures, it will threaten the safe working of the entire system. In order to limit the energy flowing into the system when the wind speed is large, it is necessary to introduce the unloading control protection circuit.

The effects of the unloading control protection device are: on the one hand, it has protection function, when the wind speed is too high, the output voltage of the wind-driven generator will increase, which may threaten the safe operation of the small-scale wind power generation system, at this time, the unloading control protection circuit consumes excess energy to avoid damage the equipment due to over speed of the fan; on the other hand, the introduction of the unloading device can consume electric energy at high wind speed and reduce the capacity of the inverter at the front end of the power grid. The design cost of the inverter in the wind power system is usually high, it occupies one-third or even higher of the system cost, therefore, designing a high-performance unloading control protection device can greatly reduce the design requirements of the inverter, thereby reducing the cost of small-scale wind generation systems, improves quality and value, and has great practical value.

The traditional unloading control circuit directly loads the unloading resistor when the unloading circuit is working, the working state of the unloading resistor is not working or full load operation, and the work of the unloading resistor cannot achieve intelligent unloading, the advantage of this method is that the control is simple, however, it causes a large fluctuation in the DC side voltage. The traditional control mode reduces the energy utilization efficiency and restricts the promotion and application of small-scale wind power generation system. In allusion to the existing problems in traditional unloading control circuit, this paper designs one intelligent unloading control protection device. The unloading device designed in this paper controls the unloading resistance according to the wind speed to realize real-time linear work. The unloading device designed in this paper controls the unloading resistance according to the wind speed to realize real-time linear work. The unloading device designed in this paper controls the unloading resistance in accordance with the wind speed to realize real-time linear work, it realizes intelligent unloading, improves energy utilization ratio, reduces system design cost, and has important practical significance for the popularization and application of small wind power generation system.

2. DESIGN PLAN OF SMALL-SCALE WIND POWER GENERATION SYSTEM UNLOADING CONTROL

2.1 Operation principle of unloading control protection device

When the wind speed is too high, the input mechanical power of the wind-driven generator will increase rapidly, the speed of the fan will continue to increase, and the terminal voltage of the permanent magnet generator will also increase. If the fan continues to increase speed without

suppression, it will not only cause great impact on the wind wheel and the mechanical drive system, Excessive voltage amplitude will also lead to insulation breakdown of the generator or directly burn the system circuit. For this reason, it is necessary to design the unloading circuit as a protection device for the fan at over speed. When the output mechanical power of the fan exceeds the limiting capacity of the inverter and causes the fan speed to exceed the limit, the unloading control protection circuit is loaded. According to the output voltage of the wind-driven generator, the unloading resistance is linearly loaded, and the excess energy is consumed by the unloading resistor to protect the fan from over speed, overload, and even flying accidents.

The functions of the unloading circuit are: when the overvoltage is detected in the system, the unloading resistor is loaded, and the unloading resistor converts the excess energy into heat energy to release, thereby protecting the system equipment from damage and making the system reliably operated. The unloading control protection circuit designed in this paper works on the output side of the wind-driven generator, when the wind speed is too large, the normal operation of the wind power generation system is realized by controlling the work of the unloading resistance, when the wind speed is reduced, the unloading load is quickly removed, all the energy output by the wind-driven generator is used for power generation output. The overall structure of this system is shown in Fig.1.

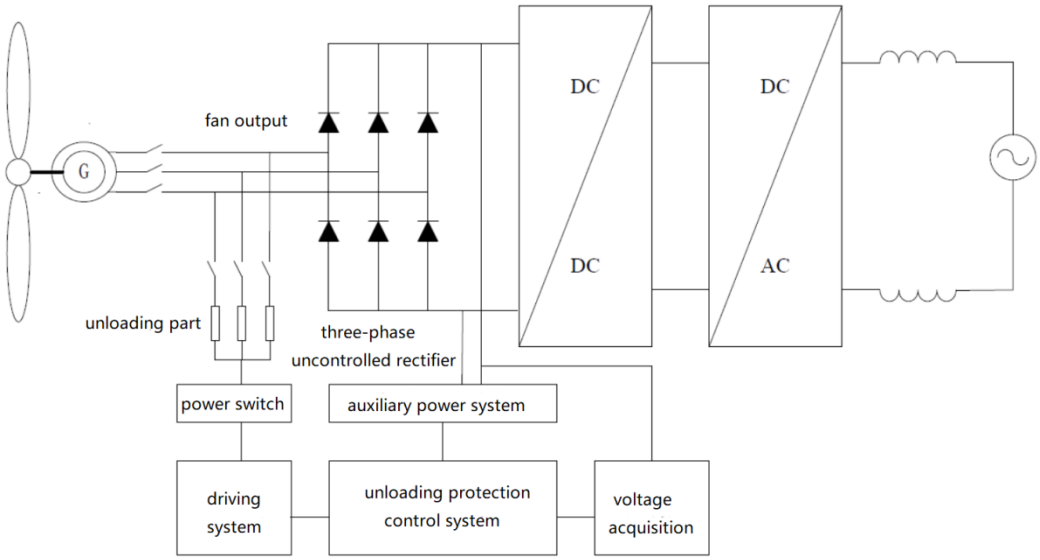

Fig.1 topological structure of rectifier unloading control system

2.2 Design of the control scheme

In small-scale wind power system, the performance of the unloading control protection circuit plays a crucial role in the whole system. Whether input and cut of the unloading circuit is timely or not, the amount of unloading power will affect the reliability and safety of the system. The input and cut of judgment conditions of the unloading circuit in the control system designed in this paper are the DC side voltage, and the unloading circuit is determined to be put into operation according to the detected DC side voltage. The control method of the unloading control protection circuit based on the scheme is: the unloading control method with the PI regulator and the schematic diagram is shown in Fig.2.

The principle of the unloading control method with PI regulator is: set the upper limit value Uref of the DC side voltage, compare the DC side voltages Udc and Uref, and perform PI adjustment on the DC side voltage deviation, control the duty ratio of power device in the unloading circuit. This control method can effectively solve the problem of DC side voltage fluctuation in the traditional control

method, and can control the unloading resistance work in real time and linearly, which improves the energy utilization ratio.

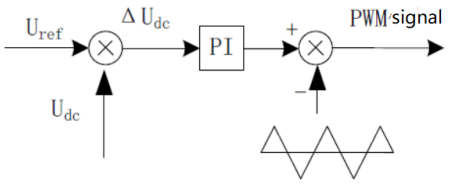

3. HARDWARE DESIGN

The hardware system of the controller mainly includes control circuit part, main circuit unloading part, voltage acquisition part, and switching power supply part. The overall structure of the rectifier unloading control protection system is shown in Fig.3.

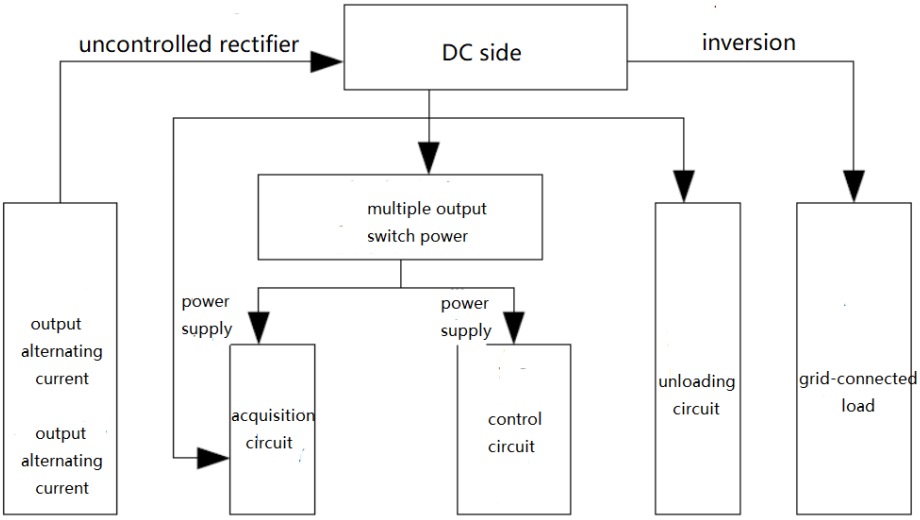

Fig.3 the overall structure of the rectifier unloading control system

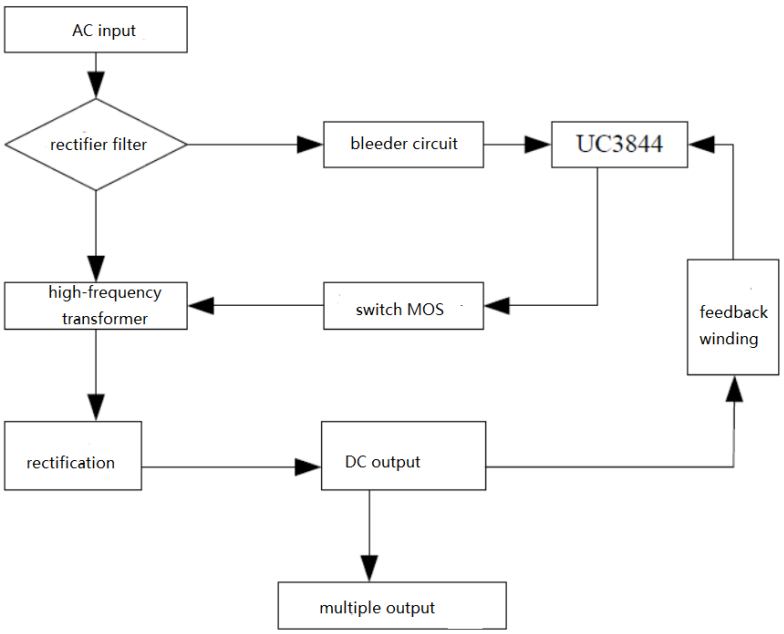

Fig.4 schematic diagram of switch power

3.1 Switch power

The rectifier unloading control system is a working system that can operate independently, the normal operation of the system cannot depend on the external power supply, and the reliable and stable power supply is the prerequisite for its operation. Therefore, designing a power supply system that can provide stable and reliable working power for the system is an important part of system design. The schematic diagram of the auxiliary power supply is shown in Fig.4.

3.2 Control circuit and unloading circuit design

The control circuit adopts the controller STC90LE516AD with A/D conversion, the high A/D conversion precision of this controller can save the external A/D conversion module. The controller output signal and the external circuit adopt optical coupling isolation, make control signals isolated from external circuit, and ensure the working stability of the controller.

According to the voltage signal input by the voltage acquisition module, the control circuit generates PWM signal after processing in controller, the switch tube drive module composed of A3120 controls the on-off of the switch tube, thus controlling the work of unloading circuit. When the wind speed is high, the wind-driven generator output more energy, and the DC voltage generated by the rectification is too high. Through the operation of the unloading circuit, excess energy is released through the unloading circuit, so that the output DC voltage is stabilized within a certain range.

4. SOFTWARE DESIGN

In order to limit the voltage too high, excess power can be released through the unloading part. The design of software part control the operation of the unloading circuit based on the fan input voltage. When the wind speed is too high, it is necessary to cut into the unloading circuit to ensure the safety of the system, the PWM signal is output by the controller to control the work of unloading circuit, according to the wind speed, the control signal with different duty ratio can achieve real-time linear input unloading load, through the unloading control method, the wind energy can be fully utilized, and the energy can be reasonably and efficiently integrated into the power grid.

When the wind speed is higher than the limit value of the unloading protection, when the energy provided by the wind turbine is higher than the load demand, the excess energy may damage the load, at this time, the excess energy needs to be released through the unloading part to ensure the safety of the load, Therefore, it is necessary to input an instruction to control the load unloading of the unloading part, when the output energy cannot meet the load requirements, the full load unloading command is cut off and all energy is used to supply the load.

When the wind speed reaches the starting wind speed, the control system starts to work, and the display module indicates the working state of the system. When the system is in the unloading state, the power switch and the unloading resistor will release a large amount of heat energy, in order to ensure safe and reliable operation of the system, when the unloading current is too large, control work of heat sink. The specific control process is shown in Fig.5.

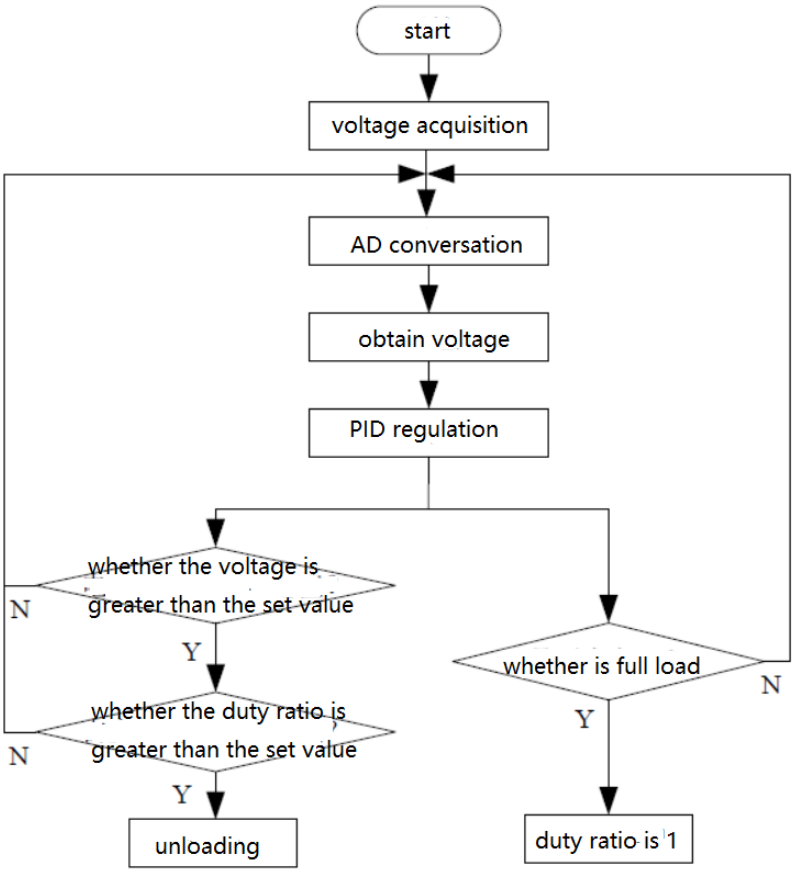

Fig.5 system flow chart

5. EXPERIMENTAL RESULTS

When the wind speed is different, the energy output by the wind-driven generator varies with the wind speed, and when the wind speed is too large, the unloading circuit works. According to the DC side voltage, the controller outputs a PWM signal to control the work of unloading circuit after processing; Fig.6 shows the control waveforms at different wind speeds.

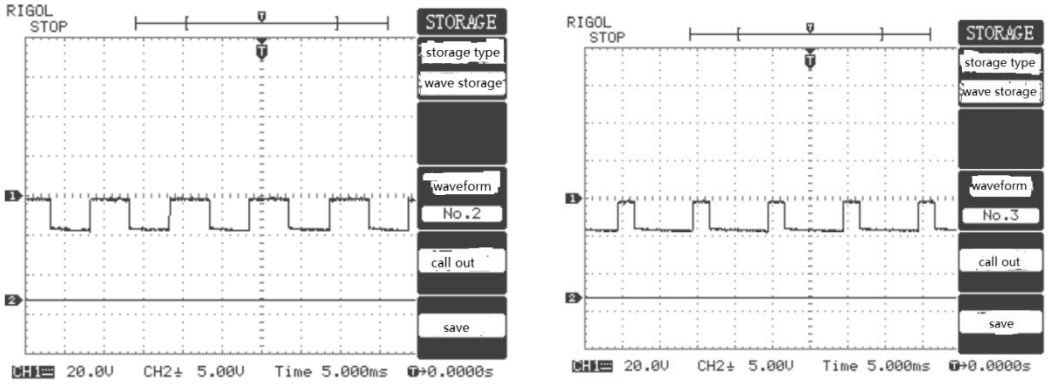

(a) control waveform when input voltage is 300V (b) control waveform when input voltage is 310V

Figure 6 output control waveform

In this paper, the unloading circuit starts to work when the DC side voltage reaches 290V. When the output PWM signal is low, the unloading circuit is controlled on. Fig. 6(a) is the PWM signal output when the DC side voltage reaches 300V, and Fig. 6(b) is the PWM signal output when the DC side voltage reaches 310V. . It can be seen from the experimental waveform that the unloading protection

circuit controls the work of unloading circuit in real time according to the wind speed, and can more fully utilize the wind energy.

6. CONCLUSION

This paper designs one unloading control protection device for small wind power generation system. In allusion to the existing problems in the traditional unloading control device, improved design are made in the circuit structure and control strategy. On the basis of the completion of the system design, the experimental analysis and research on the designed unloading control protection device is carried out, the experimental results can draw the following conclusions: the hardware topological structure designed in this paper is reasonable and effective, the main circuit parameters are selected reasonably, and the sampling precision of control circuit is high, the design of the control strategy improves the overall performance of the system. The improved unloading control protection device realizes intelligent unloading control and improves energy utilization ratio.

REFERENCES

[1] Wang Changgui, Wang Wei, et al. Construction and Management of Small-Scale New Energy and Renewable Energy Power Generation Systems, Beijing: China Electric Power Press, 2004.

[2] Li Jianlin, Zhou Qian, Liu Jian, Zhao Bin. Analysis on Converter Topology of Direct-Drive Variable Speed Constant Frequency Wind Power Generation System[J]. Power Supply Technologies and Applications, 2007, 10(6): 12-15.

[3] Yang Guoliang, Gao Ruibin, Zhang Chunjiang. Design of Braking and Protection Circuit on Vertical Axis Wind Turbine System. Power Electronics, 43(10): 53-59.

[4] Yang Xiaochen, Wang Xin. High-Linearity Analog Optocoupler HCNR200/201 and Its Application[J]. Application Example, 2003,10(5):41-42.

[5] Ren Yongfeng, Hu Hongbin, Xue Yu, Bu He, Niu Haiwei. Research on Low Voltage Ride-Through of Permanent Magnet Synchronous Wind Turbine Based on Unloading Circuit and Reactive Power Priority Control [J]. High Voltage Engineering, 2016, 42(01): 11-18.

[6] Yang Renhua, Huang Wei, Guan Li, Liu Lingfu. Structure and Operation Control of MICRO-Grids[J]. Advances of Power System & Hydroelectric Engineering, 2010, 26(01): 48-55.

[7] Zhao Bo, Li Peng, Tong Hangwei, Zhang Xuesong, Fan Yuanliang. Survey on Development from Distributed Generation to Microgrid[J]. Zhejiang Electric Power, 2010, 29(03):1-5.

[8] Fan Yuanliang, Zhao Bo, Jiang Quanyuan, Cao Yijia. Peak Capacity Calculation of Distributed Photovoltaic Source with Constraint of Over-voltage[J]. Automation of Electric Power Systems, 2012, 36(17): 40-44.

[9] Gong Yufei, Lu Zongxiang, Qiao Ying, Wang Qiang. An Overview of Photovoltaic Energy System Output Forecasting Technology[J]. Automation of Electric Power Systems, 2016, 40(04): 140-151.

[10] Huang Xing, Jin Xinmin, Tong Yibin, Liang Jiangang. A Microgrid Control Method with Fast Resynchronization Capability[J]. Journal of Beijing Jiaotong University, 2012, 36(05): 7-13.