Computer Life (CPL) ISSN: 1819-4818
DELIVERING QUALITY SCIENCE TO THE WORLD

Design Rule of Bionic Quadruped Robot

Mingyu Zhang

Suzhou Institute of Industrial Technology, Department of Electronic and Communication Engineering, Suzhou 210154, China;

zmy_hlg@163.com,

Abstract: There are many dangerous places in nature. Such as volcanoes, marshes, mine disaster rescue and anti-terrorism struggle. When these difficulties come, through human continuous exploration and research, we need a feasible way to resist them. Through exploration and research, human beings invented intelligent robots, which solved the difficulties faced above. In this context, the research on bionic intelligent robot is the most successful. Its excellence lies in its leg structure. It can be able to find suitable supporting points in different environments like biological legs. For example, on complex roads such as hillsides, ravines and sand dune. Up to now, bionic robots have been released in a variety of ways, including quadruped bionic robots, walking robots and so on. From the performance of robots alone, quadruped robots are currently the best. This article introduces in detail the leg structure and bionics of nature in biology. The design of joint design and drive is elaborated in detail. We draw lessons from the existing bionic robots and consult and analyze the relevant scientific research results, and summarize the design rules of bionic robots.
Keywords: Quadruped machine, bionic leg, bionic mechanism.

---

1. INTRODUCTION

There are many dangerous places in nature, such as volcanoes, swamps, mine disaster relief and the fight against terrorism [1-3]. When these difficulties come, through human continuous exploration and research, we need a feasible way to reduce these difficulties. Through exploration and research, human beings invented intelligent robots, which solved the difficulties faced above. In this context, the research on bionic intelligent robot is the most successful. Since the emergence of robots, wheeled and caterpillar robots have always been the preferred style for road surface movement, relying on their advantages of fast transfer speed, high efficiency and convenient control. But there are also shortcomings. Nearly half of the nature is inaccessible to existing roller or tracked robots [3-6]. However, humans and animals can reach anywhere in nature through their own conditions (leg structure). Among them, the multi legged robot is the most outstanding. The shape of each foot can be adjusted to adapt to the harsh conditions of walking, even in the face of some relatively complex road conditions, such as sand, gully, slope surface and other complex situations. The advantages of bionic robots are not only those mentioned above, but also some other advantages: the first bionic

mechanism of multilegged robots can reach where they want to go like humans and quadruped mammals. The second route generated by the motion of bionic robot is a kind of discrete route, which only needs discrete points to touch the ground, so that not only the damage to the environment is reduced, but also more suitable supporting points can be adopted. To sum up, we combine bionics with kinematic camera to further optimize the mechanism of quadruped robot, focusing on the structural characteristics of quadruped limbs, kinematics, and joint design and driving unit optimization. A walking quadruped robot is designed and verified repeatedly, which proves the feasibility of the mechanism design in this paper. The research field of bionic robots in China is not as early as that in foreign countries, and the related theories are also lagging behind. Substantive research theories have only been put forward since the end of 1980s. At the beginning of the research, China's high-tech research and development plan No. 863 of 2011 shows that China is doing in-depth research on quadruped robots. Many universities have begun to join this group. Before that, Chinese universities published different forms of robots. In general, the quadruped robot they publish can simply walk on a gentle road. The bionic robots studied by Shanghai Jiaotong University optimize the position of the driving unit of the bionic robots on the basis of the original ones[4-8]. The leg structure of the quadruped robot belongs to the hybrid structure. The advantage of this method is that it can reduce the overall weight of the leg. This kind of quadruped robot can perform both moving and static gaits. In order to improve the adaptability of quadruped robot, through consulting data and experiments, it is confirmed that the designed quadruped robot uses bionic leg structure. The most common driving methods are hydraulic drive, pneumatic drive and motor drive. In fact, we can see hydraulic driving as mobility. The advantages of hydraulic starting are stable and easy to start. You can complete frequent reversing. But the whole system structure is relatively complex, mainly including mechanical structure, control system and so on. In addition, because of the flexibility of the fluid medium, the current position cannot guarantee the constant transmission of power, thus changing the stability of the system. The accuracy will change, and then the sealing problem will result in a lot of maintenance costs. This drive mode is suitable for heavy haul and large industrial equipment, and is not suitable for small walking robots. Air pressure is driven by air as a medium. Although it is light in weight, the existence of pressure makes the position accuracy lower. For air pressure start-up, the sealing performance is good. The advantages of pneumatic drive are low energy cost and low working requirement. The shortcoming of pneumatic drive is insufficient power and huge equipment. In addition, considering the compressibility of gas, the leakage problem becomes the most fatal defect. The impact is also the most fatal. Motor drive is our popular motor. The advantages of motor drive are simple operation, easy signal feedback and large driving torque. The purpose of our design is to make the quadruped robot highly adaptable to environment and flexible and convenient to operate. This paper mainly introduces the research status of bionic robots in detail. The driving schemes of quadruped robot are compared and analyzed. This paper mainly analyses the body structure of quadruped robot, and then with the help of bionics books and existing information of quadruped robot, elaborates the body structure scheme, and finds out the main problems. Finally, we analyzed the existing mechanical structure and bionics, and gave the layout and parameters of the body [5-8].

2. STRUCTURAL of ROBOTS

By consulting the data, we analyze and compare the existing body structure of quadruped robot. Through this preparation, we can provide great help for our follow-up work. The relationship between leg structure and leg and body support of quadruped robot can be simply divided into series mechanism and combination mechanism. Each part of the mechanism is linked together, that is to say, the rear part is powered by the front. In quadruped robot, because of the large working space of the chain opening mechanism, the degree of freedom is also very high. In the course of movement, position changes can be timely feedback, and location is easy to recover. The disadvantage of the chain opening mechanism is that both the bearing capacity and synchronous coordinated control cannot be combined. As a closed system parallel robot, its closed chain mechanism is composed of four-link mechanism and swing telescopic mechanism. Under the combination of these mechanisms, the closed chain mechanism has the advantages of large load capacity and low energy consumption. By comparing and analyzing the serial robot with the parallel robot, it is concluded that the advantages of the parallel robot are higher than those of the serial robot. Although parallel robots have more advantages than serial robots, their disadvantages are also obvious, that is, the overall structure is complex, the manufacturing cost is high, and the flexibility and active space of parallel robots are far behind those of serial robots. In addition, the research of parallel robots is relatively late. So relative research results are relatively few. In addition to these two leg forms, there is another mechanism: the hybrid leg mechanism. The joint leg mechanism is between series and parallel. They have their own merits and demerits, with little research results and large size and complexity. Based on the analysis and comparison of the three mechanisms, a quadruped bionic robot leg structure with high quality, high flexibility and simple control is designed according to our design requirements.

Bionics is a new subject, but from the past to the present, most of the things invented by human beings are animal's movement behavior as a reference. The rapid development of this discipline has enabled us to further understand bionic robots. Therefore, we can draw lessons from the animal body structure to design these four legged robots. In order to improve the adaptability of bionic robots and make them more flexible and easier to walk in complex areas. We need to analyze bionics to optimize its control system. Animals are able to exercise because their bodies cooperate with all parts of the body. Before analyzing the structure of the foot, we studied the relationship between the body and the limbs of animals. This undoubtedly provides effective help for walking mechanism research.

Since our research object is quadruped robot, it is necessary to decompose and analyze the body structure of its skeleton. At the beginning of the design, we mainly refer to the quadruped walking animals to study the body structure and behavior characteristics of mammals. Biological evolution has adapted to survival, so the design of our bionic quadruped robot was initially based on the shape and behavior of animals. Through research, we can simply divide the legs into front structure and rear structure. Quadruped legs include thighs, knees and treads. In the course of walking, the hip joint adjusts its direction through the swing before and after, and the knee joint can be simplified to the degree of free swing, and the joint loss can be reduced. The knee joint is used as an elastic unit to reduce the impact of damage, and the main body and legs are used for quadruped walking so that it can walk on complex ground.

Through bionics, we found that quadruped four legs are pairs. Each leg can be divided into three sections, thigh, calf and foot. We connect the three parts of the knee and ankle. We can also find the plantar structure of animals, which is made up of a structure called a passive DOF junction. Its main purpose is to reduce impact. The mechanism of bionic robot mainly includes body bracket, leg structure and foot structure.

In our design, we first considered that four groups of robots need to install drivers, batteries and so on. Therefore, this paper adopts a fixed connection between the rod and the plate to ensure that the space is large enough. Thus, the overall quality of quadruped robots can be reduced. As shown in Figure 1, we have enough space on the main plate to keep the space position of the main joint driving unit, which will help the design later. The hip joint consists of two degrees of freedom. They can swing axially and radially along the hip joint. Because these two movements are in two directions, such a mechanism can make the leg move more flexibly and expand the range of motion space. At present, the quadruped robot in China has eliminated the axial swing and made the structure more stable, but the defect is that it can not achieve flexible turning. Although the quadruped robot we studied improved this defect, it resulted in a relatively large torque, so the improved mechanism is different from the leg of the driving unit, which should bear enough load torque.

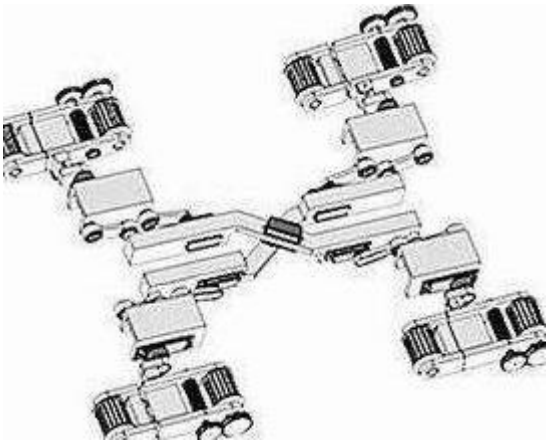

Fig. 1 Three dimensional diagram of rack

In our design, we first considered that four groups of robots need to install drivers, batteries and so on. Therefore, this paper adopts a fixed connection between the rod and the plate to ensure that the space is large enough. Thus, the overall quality of quadruped robots can be reduced. As shown in Figure 1, we have enough space on the main plate to keep the space position of the main joint driving unit, which will help the design later. The hip joint consists of two degrees of freedom. They can swing axially and radially along the hip joint. Because these two movements are in two directions, such a mechanism can make the leg move more flexibly and expand the range of motion space. At present, the quadruped robot in China has eliminated the axial swing and made the structure more stable, but the defect is that it cannot achieve flexible turning. Although the quadruped robot we studied improved this defect, it resulted in a relatively large torque, so the improved mechanism is different from the leg of the driving unit, which should bear enough load torque.

In the process of high-speed collision or high-speed attack, the rapid elimination of two objects has increased dramatically. The power of loss is what we call collision force. This force is characterized by time and momentum. For example, when you play volleyball with your hands, when you play,

when you hit billiards with your club, when you bowl. The contact time between two moving objects is relatively short, and the energy changes greatly in contact with the separated objects, so the impact is enormous.

The impact force of robot foot mainly depends on gait, speed, material coefficient of foot and ground, and the error is relatively large. If the sole with high hardness is used, the impact force will have a great impact on the body and driving unit, which can not meet the design requirements. In order to reduce wear and tear on the body structure, the legs of the feet are used in a passive degree of freedom. It has good cushioning effect. A material with friction coefficient is installed in the structure of the foot. In order to prevent slippage during walking, leave enough space under the foot to install materials that increase friction. The control of spring strength is an indispensable part of the body stability system. If the force is too small, the larger elastic error of the foot is not conducive to control, and is not good for the machine.

Robot mechanism design includes many aspects. Based on mechanical design and principle, we have carefully designed all parts of the foot robot to meet the processing requirements, but mechanical design is not an independent design idea, but separate from simulation. It is very necessary for us to combine the kinematics and mechanics analysis of quadruped robots. Continuous improvement in dynamic analysis software. Improvement and redesign of parametric model. On this basis, the mathematical model is given. Finally, we analyze the quadruped robot, as shown in Figure 2.

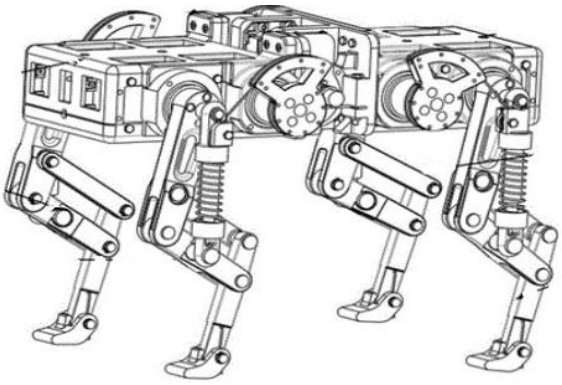

Fig. 2 Prototype of bionic robot

3. CONCLUSION

Since the advent of bionic robots, people have been very keen on this invention. The body mechanisms of the four groups of bionic robots we studied are only part of the research of bionic robots, and this research has been very popular up to now. Before carrying out the research of quadruped robot, only by establishing a stable system, can we better carry out the follow-up work. In order to get a deeper understanding of multi-legged robots, this paper only studies the diagonal gait of robots. Four-legged animals in nature have many motion patterns. Dynamic forms, such as running, jumping, rolling and so on, need further research.

ACKNOWLEDGEMENTS

This work was in part supported by the Research Fund of Suzhou Institute of Industrial Technology (SKYKJ201707), the Young Teachers of Vocational Colleges Enterprise Practice Training Project of Jiangsu Province(2017QYSJPX021), and the Scientific Research Foundation of Suzhou Institute of Industrial Technology(2017kyqd005), to which the authors are deeply indebted.

REFERENCES

[1] Gao J, Duan X, Huang Q, et al. The research of hydraulic quadruped bionic robot design[C]// ICME International Conference on Complex Medical Engineering. IEEE, 2013:620-625.

[2] Wang P, Yu Z, Zhou C, et al. Embedded control system design and experimental analysis of bionic quadruped robot[J]. Science Technology & Engineering, 2014:4187-4191.

[3] Liu Z G, Ding X F. Planning and Simulation of the Rule-Based Trotting Gait of a Bionic Quadruped Robot[J]. Advanced Materials Research, 2014, 971-973:624-628.

[4] Li Z, Li H K, Zhang H, et al. Analysis and Design of Hydraulic System of a Hydraulically Actuated Quadruped Robot[J]. Applied Mechanics & Materials, 2014, 461(461):861-868.

[5] Zhang X, Jiang X, Luo X, et al. Design of an Active Compliance Controller for a Bionic Hydraulic Quadruped Robot[C]// International Conference on Intelligent Robotics and Applications. Springer, Cham, 2017:846-855.

[6] Cao S Y. The Mechanical Structure Design of Bionic Quadruped Walking Robot[J]. Applied Mechanics & Materials, 2016, 851:484-491.

[7] Hu H X, Tang B, Shi C L, et al. Establishment of Gait Control Model of Quadruped Robot Based on the Theory of Bionic Motion[J]. Journal of Computational & Theoretical Nanoscience, 2016, 13(10): 7548-7553.

[8] Zhang X, Jiang X, Luo X, et al. Design of an Active Compliance Controller for a Bionic Hydraulic Quadruped Robot[J]. 2017.