Computer Life (CPL) ISSN: 1819-4818
DELIVERING QUALITY SCIENCE TO THE WORLD

An experimental system of long-distance communication data transmission based on statistical method

Xinyang Mao [a,*], Ziwei Hu, Yuyang Peng and Jun Liu

School of International Education, Nanchang Hangkong University, Jiangxi, China

[a]1141659809@QQ.com

Abstract: Long-distance communication transmission by all kinds of factors of time and space limit, can cause adverse effects to the stability and security of the communication, to design a kind of long-distance communication transmission experiment system based on statistical analysis method, the system hardware parts, radio frequency transmission system controlled by C8054F269 type, data caching module, data acquisition system and other parts, in detail elaborated the system composition of main chip and the communication circuit structure of acquisition system; System software consists of data management, long-distance monitoring, parameter adjustment and auxiliary function of main modules, such as data management system were given and the working process of the long-distance monitoring module, statistical analysis method on the far side of main advantage is able to do data preprocessing before and the classification of the file type, thereby improving the transmission efficiency and stability of the long-distance data transmission. The analysis results show that the transmission system with the same size of data file has shorter time and lower packet loss rate..
Keywords: Statistical method, RF transmission, Data acquisition, Long-distance monitoring.

---

1. INTRODUCTION

Due to the limitation of the communication distance, the stability of the communication signal is weaker than the short-range communication transmission. In order to improve the communication disadvantage, it is necessary to improve the overall performance of the system by means of hardware update debugging and software adaptation optimization[1]. A large number of research has been made in the field of long-distance communication data transmission, a long-distance communication data real-time transmission system is designed based on the method of baseband frequency hopping, and the width of the channel is enlarged by way of optical fiber decoding, but the cost of the method is too high, in the long-distance communication transmission system based on the Gaussian dynamic distribution, the advantages of the Gaussian function on the dynamic distribution of the signals are utilized, the stability of the long-distance signal is improved, And can not meet the requirement of long-distance simultaneous transmission of the mass communication signals[2]. In view of the shortage of the data transmission system in the present long-distance communication, a long-distance

data transmission system based on the statistical analysis method is designed, and the stability of the long-distance communication transmission and the efficiency of the data transmission are improved.

2. HARDWARE DESIGN

The process of target tracking can be defined as the process of filtering the current state of the target and predicting the state of the target at the future. The core problem of target tracking is state estimation. The state of the target includes various motion parameters and descriptive parameters, such as the position, velocity and acceleration of the target. We need to estimate the state of the target according to these parameters. State estimation is carried out in both cases, such as the uncertainty of the target model and the uncertainty of the measured value. Once the actual trajectory of the target motion is inconsistent with the established target motion model, there will be a lot of errors in the tracking[3]. The uncertainty of measurement is due to the external influence in the measurement process, resulting in noise in the measured value. The long-distance communication transmission is influenced by the objective environment, the communication distance, the communication protocol between the countries and the ground-form climate change the effect of the long-range number to the different range. However, with the increasing frequency of global economic and trade exchanges, the traffic volume of the long-range communication is increasing continuously, and the corresponding long-distance communication system is expanding continuously, and the continuous expansion of the communication transmission system has brought a lot of new problems. In addition, the long-range mobile communication terminal user has strong randomness and bursty, to improve the performance of the long-distance communication transmission system, and also needs to adjust the configuration and the parameters of the design of the long-distance communication signal transmission system, so as to ensure the communication network to operate in a more reasonable way[5]. The long-distance communication data transmission system can analyze and classify the communication data in a variety of ways to achieve the ultimate purpose of system performance optimization.

2.1 General idea of system hardware design

In order to realize the synchronous connection between the long-distance data communication system and the local communication system and the data buffer system, the long-distance communication system design based on the statistical analysis method also covers the auxiliary functions of the acquisition of the long-distance communication data, the data cache relay management, the data communication protocol management and the like[6].

2.2 Application of Statistical Analysis Method in the Design of Long-distance Communication Hardware

The statistical analysis method is mainly used for the collection and pre-processing of the long-distance communication data[7]. Because the data volume in the long-distance communication is huge, in the hardware design, the statistical analysis function of the hardware and the cost of the hardware acquisition are to be taken into account. The utilization value of the statistical analysis method is mainly the introduction of the long-distance communication data into the data mining algorithm, and the pre-location of the mass communication number is also one of the number of parts to be dug. The long-distance communication has a large number of interference data, the statistical analysis method has powerful data analysis and classification function, and the basic data analysis and analysis and processing functions of the data transmission system are improved by means of

special software such as SQL and Oracle in the long-distance communication data transmission. In the long-distance communication data transmission, the statistical analysis method uses the relevant knowledge of the mathematical statistics to find the middle discrete point of the long-distance data, and accurately position the useful communication data and eliminate the interference data in the heterogeneous network.

2.3 Composition of the system hardware framework

The system is composed of long-distance communication information acquisition system, C8054F269 single chip microcomputer, radio frequency system, long-distance data storage system and so on. The long-distance communication information acquisition system is composed of regional terminal sensor, communication acquisition circuit and signal amplification circuit. In order to improve the transmission efficiency, the terminal data acquisition sensor needs to select the MA256G sensor with high cost. Considering the stability of the signal, the long-distance communication acquisition circuit is designed, and the communication acquisition circuit based on statistical analysis method is shown in Fig 1.

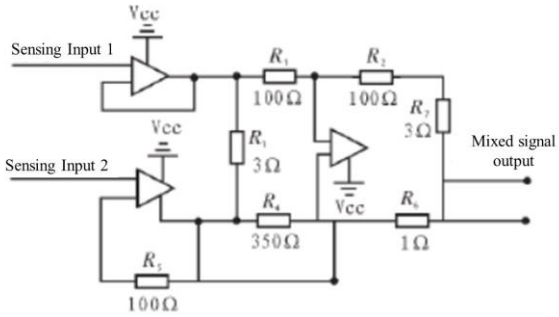

Fig. 1 Circuit diagram of long-distance communication acquisition system

The long-distance communication sensing data enters the acquisition circuit system through two paths. The circuit structure consists of seven resistance, and the resistance distribution ranges from 3 Ω to 350 Ω. Finally, the processed communication data is output in the form of mixed signal number. The hardware and software can be debugged in the test stage of long-distance communication. C8054F269 single chip microcomputer has the power and energy of long-distance communication signal number, and integrates the MCU. of system type. The built-in microcontroller of C8054F269 chip is connected with 8512 standard. The system debugging interface in the chip is in high speed mode, and the interface of universal serial bus is USB model control mode. The universal interface controller meets the requirements of USB3.0 high-speed transmission and can implement long-distance point-to-point data transmission. In order to improve the overall function of the data transmission system, the C8054F269 chip includes 15 I / O interactive ports. The built-in cross switch functional setting of the chip is very flexible, which can improve the compatibility of the system. In order to filter the interference of external noise in the QPSK modulation system, the RF chip usually has its own filtering function. In the process of transmitting and receiving the signal, it is necessary to carry out the real-time high-pass filtering processing of the long-distance data in the transmission to ensure that the functionality of the system is more complete.

3. SOFTWARE PROCESS DESIGN

Above, the hardware part of the long-distance communication data transmission system based on statistical analysis method is designed and described in an all-round way, and many basic functions of the long-distance data transmission system need to be realized based on the software algorithm flow[8]. First, the parameters of C8054F269 single chip microcomputer are initialized, the system clock is set, all kinds of initial data of input and output ports are set, the state of data transmission is kept, and the basic state of data receiving port is analyzed every 5 s clock. When the single chip microcomputer issues the instruction through the radio frequency module, the command is transmitted to the data transmission system through GSM network, and the system command of data acquisition is opened and executed. The long-distance data transmission passes through the single chip microcomputer of multi-channel transmission system, and then the data is stored and processed to get the key data needed for analysis. The main architecture of this software system is composed of long-distance data monitoring module, parameter adjustment module, data management module and auxiliary function module.

The main functions of data management module include system login, data query, password management and data deletion. The background operation authority is set by the system administrator, the long-distance end collected by the sensor is stored in the system database, and the administrator is responsible for the maintenance of the system and the database. The interface form of long-distance database is ADO serial port mode, and the parallel serial port is connected to the local wireless communication module through GMS network. The event-driven mode of database adopts serial interface mode, and the software control is used to deal with long-distance communication events, and the data management module also has built-in data filtering and verification function, which can identify the abnormal situation of long-distance data base.

The long-distance data transmission monitoring module program is the gateway in the main control program the implementation of the long-distance operating function relies on the access to the long-distance data, Statistical analysis function. when the acquisition system of the terminal acquires the real data of the far end, After the number of tests, the profits were transmitted to the network via the GMS No-wire-through-wire network. The C8054F269-type single-chip computer system is based on the operation interface of the system the input and output of the related instruction are realized in a VB template.

According to the long-distance data transmission, the supervision and control module block is opened and sent to send the collection order, to determine whether or not to accept the collection instruction, to determine whether the collection instruction is carried out according to the number of screening orders, and to determine whether it is stored in the screening command or not, and to send the supervision and control order after sending it to the supervision and control order, and to obtain the result of the supervision and control. Record the fruit at the same time. In this process, the clock in C8054F269 single chip microcomputer is used to record the running state and running cycle of the system, and the link function is very close to the connection between the modules to ensure the smooth flow of the long-distance communication system. In this paper, an experimental system suitable for long-range communication data transmission is set up based on the unified calculation

method, and the security and full transmission of the long-range communication data is realized through the matching of the hardware system and the combination of the soft parts and the die blocks.

4. THE EXPERIMENTAL PART

After the basic functions of the long-distance wireless communication data transmission system are complete, it is necessary to test the basic functions of the system in order to verify whether the indicators of the long-distance communication system meet the requirements.

In the experimental part, the data transmission efficiency and cache management ability of the long-distance communication data transmission experiment system designed in this paper are verified respectively. The frequency band is set to 2.4 GHz without interference and 400 GHz with interference. In this environment, the transmission efficiency of files of different sizes and the number of error packets are verified. The design of long-distance communication system based on statistical analysis and the design of long-distance transmission system based on frequency hopping method proposed in this paper are compared and verified, and the number of packets lost in data transmission under the two systems is counted.

When the size of the long-distance transmission data is increasing, the number of packet loss packets of the data is increased, and the data packet loss quantity and the data statistics of the two long-distance data transmission systems are shown in Table 1.

Table 1 Statistics on the number of packets lost

data transmission	30M	1000M	500M	1500M	5000M	2T
Number of packets lost in this paper system	4	5	9	16	19	23
Number of packets lost infrequency-modulated system	11	19	32	37	40	45

According to the changing trend of packet loss number and the statistical results of Fig 2, the performance of the data transmission system based on statistical method is better under the same long-distance data transmission scale. The data cache ability of the data transmission system is also one of the main indicators to evaluate the performance of the system. The number of user visits and the data cache time in the 24-hour range of September 26, 2018 are randomly selected to test the data cache performance of the proposed system. The statistical results are shown in Table 2.

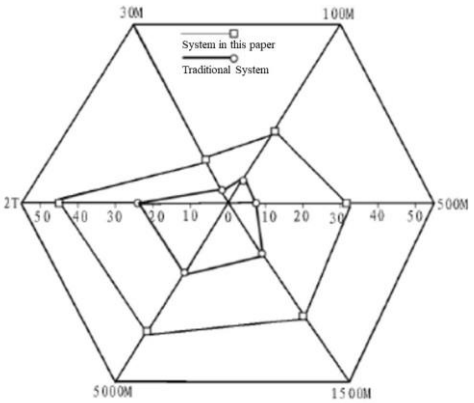

Fig. 2 Comparison of data packet loss under different file sizes

Table 2 The number of access times and the cache time of the transmission system based on the statistical analysis

period of time	umber of visits	Cache time	period of time	umber of visits	Cache time
1	56	1h	13	1025	3h
2	34	1h	15	1254	3h
3	102	1h	17	357	2h
4	586	2h	66	98	1h
5	2536	3h	21	66	1h
6	987	3h	24	32	1h

And the data of the conventional system is slow under the same access times. The storage time is not more than 1 hour. As can be seen from the above, the long-distance control system designed in this paper The design of the transmission experimental system is superior to the performance and stability

5. CONCLUSION

In this paper, the idea of statistical analysis and the related technology of GSM wireless communication are introduced. On the basis of studying the statistical method, the overall framework of long-distance data communication system is designed, and the single-chip microcomputer structure circuit, RF module, memory module and other hardware structures of long-distance data transmission system are given. The overall construction idea of the system software flow is introduced in detail, and the integration of hardware structure and software algorithm is realized by statistical analysis technology, so that the functions of the overall system can be realized.

However, the system also has the following aspects to be perfected, firstly, the capacity of the long-distance relay transmission database is small, the capacity of the long-distance relay transmission database needs to be expanded and improved in nature to accommodate more transfer link data, and secondly, in the subsequent research, And the mobile data compatibility capability of the long-distance data transmission system is gradually improved, and the security and the overall transmission efficiency of the data transmission system can be improved. At the same time, it is also necessary to gradually open the background management authority to allow the long-distance service data transmission to provide services for more groups.

REFERENCES

[1] Lawrance A J, Papamarkou T, Uchida A. Synchronized laser chaos communication: statistical investigation of an experimental system[J]. IEEE Journal of Quantum Electronics, 2017, 53(2): 1-10.

[2] Jouguet P, Kunz-Jacques S, Leverrier A, et al. Experimental demonstration of long-distance continuous-variable quantum key distribution[J]. Nature photonics, 2013, 7(5): 378.

[3] Kim J, Kim H, Tay B K, et al. Transatlantic touch: A study of haptic collaboration over long distance[J]. Presence: Teleoperators & Virtual Environments, 2004, 13(3): 328-337.

[4] Awad A, Frunzke T, Dressler F. Adaptive distance estimation and localization in WSN using RSSI measures[C]//10th Euromicro Conference on Digital System Design Architectures, Methods and Tools (DSD 2007). IEEE, 2007: 471-478.

[5] Xiao S Q, Chen J, Wang B Z, et al. A numerical study on time-reversal electromagnetic wave for indoor ultra-wideband signal transmission[J]. Progress In Electromagnetics Research, 2007, 77: 329-342.

[6] Gabriel C, Khalighi M A, Bourennane S, et al. Monte-Carlo-based channel characterization for underwater optical communication systems[J]. Journal of Optical Communications and Networking, 2013, 5(1): 1-12.

[7] Peng C Z, Zhang J, Yang D, et al. Experimental long-distance decoy-state quantum key distribution based on polarization encoding[J]. Physical review letters, 2007, 98(1): 010505.

[8] Triki-Lahiani A, Abdelghani A B B, Slama-Belkhodja I. Fault detection and monitoring systems for photovoltaic installations: A review[J]. Renewable and Sustainable Energy Reviews, 2018, 82: 2680-2692.