Computer Life (CPL) ISSN: 1819-4818
DELIVERING QUALITY SCIENCE TO THE WORLD

Research on mobile phone fast charger

Ronghui Xue

Xi'an Aeronautical University, Xi'an, Shaanxi 710077, China

Abstract: Electronic products need high-quality power supply, charger has become one of the core of this system. In this paper, a kind of mobile phone fast charger is designed. This design converts the city power into the suitable voltage for mobile phone charging. Firstly, the city power is converted into direct current through the rectification and filtering circuit, and then it is converted into high-frequency high-voltage pulse by the switch tube, and then the transformer is changed into low-voltage pulse. The specific low-voltage value depends on the voltage of the charging equipment. Then, the low-voltage pulse is converted into the required direct current through the rectifier circuit and voltage stabilizing circuit. The conversion process from AC to DC should go through rectification circuit, transformer, voltage stabilizing circuit, etc.
Keywords: switching power supply; mobile phone; fast charger.

---

1. INTRODUCTION

What mobile phones bring to people is faster and faster dialogue and games, which sublimates people's life style and quality. Basically, each person has a mobile phone, children have a phone watch. The operation of mobile phone is inseparable from the power supply, so the role of mobile phone battery and charger is very important. There are more and more problems about the charging of rechargeable batteries. In order to keep the normal life, it is necessary to design a charger with high performance, size, light weight and fast charging to achieve faster and safer charging.

As a new type of power supply, switching power supply has the characteristics of small size, light weight, simple operation and low cost. It has been widely used in many fields such as communication electronics, aerospace and instruments. Multi functional, ultra small, modular circuit and other power products. At present, electronic equipment and we can be said to be dependent on each other. Because of the relationship between the markets, the switching power supply market has been developing continuously in recent years, and the overall situation is also rising steadily. With the increasing demand, manufacturers need to further develop their own technology to compete with other peers. However, in the switching power supply market, there are very few manufacturers with their own core technology. Most manufacturers do not have their own technology. Their role in the market is just a middleman who buys goods through other ways and then turns to be a secondary agent. At present, China's large switching power supply manufacturers master their own core technology and perfect production process, and have strong integration ability. The progress of the times has led to the constant updating of high technology, and there are many kinds and styles of new smart phones

at home and abroad. As one of the system's chargers, its development will certainly have a foreseeable future.

2. DESIGN OF MOBILE PHONE CHARGER

The composition of mobile phone charger needs reliable power supply, voltage and current, combined with corresponding protection and comparison circuit. The principle of the common charger that users use now is actually designed with USB port of computer with stable power output as voltage source combined with some auxiliary circuits. Although there are various styles, brands and models of mobile phones, and the shapes and interfaces of mobile phone chargers are slightly different, the effects of these chargers are the same, they are all charging for mobile phones, and the charging principles are roughly the same, and the circuit structures are mostly similar. Mobile phone charger is basically composed of a stable power supply and the required filtering, rectifying, voltage limiting and protection circuits.

2.1 General charging mode of mobile phone

Necessary conditions for battery charging: the voltage of the battery should be lower than the charging voltage of the charger. Only under this condition can the charge move and start charging. According to the formula P = UI, the battery capacity remains unchanged, and the charging speed is controlled by P. according to the formula, there are three ways to shorten the charging time. But each has its own advantages and disadvantages.

Constant voltage to improve current is widely used. Most cell phone chargers use this output method. 5V and 1A are the most common. Now there are 5v2a chargers, which can speed up the charging by increasing the current. But technically speaking, only if the mobile phone and charger are matched, the best effect can be achieved. If the two are not compatible, it still can not achieve fast charging.

In addition, we should pay attention to the reasonable adjustment when changing the current. We should not change the current blindly in order to achieve the purpose, but pay attention to the actual heating problem. The safety of electronic products is always the first, many examples show that the protection of heat dissipation circuit is not perfect. It may cause serious heating and even explosion of the mobile phone. Therefore, the maximum current limit is required in the design of electronic products, whether it is charger or electrical equipment, so as to avoid accidents. The figure below shows the charging process of a mobile phone, in which the mobile phone power management terminal intelligently regulates the current.

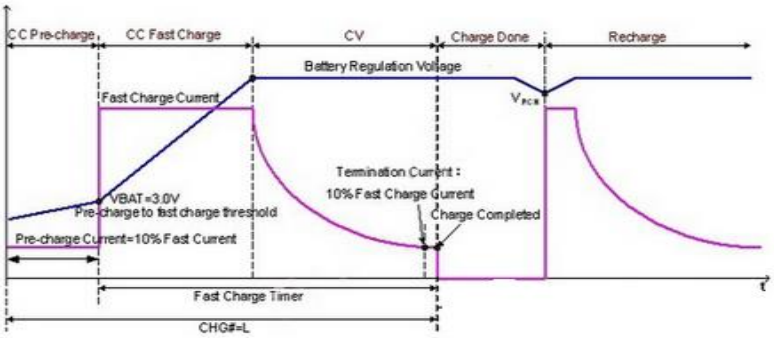

Fig.1 Intelligent current regulation of mobile phone power management terminal

The horizontal axis refers to time and the vertical axis refers to battery voltage v. The red line indicates the charging current. The blue line represents the voltage. During the charging process, the management system of the mobile phone will monitor the change of voltage and current in real time and make instructions to avoid damage to the battery caused by over-voltage or over-current. The charging process of lithium battery can be divided into three stages: constant current pre charging, high current constant current charging and constant voltage charging.

Now many mobile phones will be based on the actual use of lithium batteries. When the power of the mobile phone is lower than the set value, the mobile phone will turn off automatically. This is to protect the performance of the battery, excessive discharge will seriously damage the internal of the battery, resulting in drastic changes in its internal chemical reaction. At present, the shutdown voltage of many mobile phones is set at about 3.2V. According to the energy distribution of the battery and the use of mobile phones in real life, it is the best time to shorten the charging time by changing the charging current during the constant current charging stage. Most mobile phones use the charging current of 450 Ma as the standard in this period. If you want to change its size, it needs technical perfection and overall design. Therefore, if you want to achieve faster charging, you still need to make more breakthroughs in the second stage. According to the research and the actual situation, the most suitable charging rate of lithium battery should be about 1C, which can shorten the charging time as much as possible, and it will not change the performance and life of the battery pack.

2.2 Fast charging mode of mobile phone

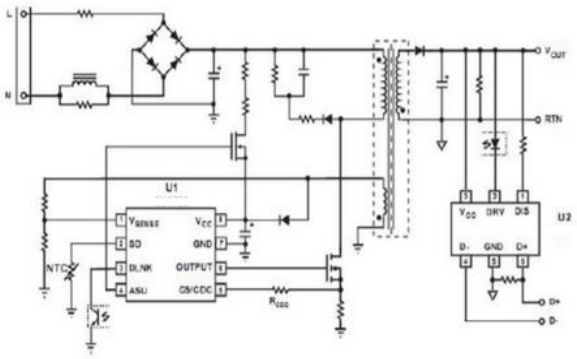

Fig.2 Power supply part

2.2.1 High pass quick charge

At present, the charging technology of Qualcomm quick charge has developed to the second and third generation. Compared with the first generation of 5V / 2A constant current and voltage technology, the second generation raises the voltage and current to a higher level. The voltage is divided into three grades: 5V, 9V and 12V, and the current is directly increased to 3a. This progress makes the charging speed rise to a higher level. While the second generation technology developed a certification agreement in the development, only if the mobile phone and charger meet the certification at the same time, can it be compatible. Some low voltage charging that does not conform to the high pass fast charging certification protocol can only be charged with a current of no more than 1a. The second generation charging technology of Qualcomm has improved the power of charger and reasonably controlled the heating problem in a certain range. The third generation technology is developed to solve the reception efficiency of mobile phone side, so as to improve the overall performance.

Compared with the second generation, the third generation adds an "optimal voltage intelligent regulation" algorithm, which uses 200mV as a step for intelligent regulation, and can freely switch between 5V and 20V voltage (qc2.0 only supports 9V, 12V and 20V gears). This method allows the phone to reduce energy consumption during charging.

The above figure shows the working circuit of high pass qc3.0. The working process is that an IC is connected to the IC of QC through USB at the secondary port of the charger. The data cable D + and data line D - transmit the signals of electronic devices to the charger The two extreme control equipment processes the required voltage, decodes the content of the signal, and then requires the first AC / DC controller to change the output voltage through the optocoupler to reduce the loss and maximize the efficiency.

2.2.2 Oppo vooc flash charging

The principle of the vooc flash charging technology developed by oppo is to increase the current with constant voltage. On this basis, they also made technological innovation. By increasing the current to about 4.5a, the voltage remains unchanged, and using large current to increase the charging speed.

Only when compatible charger, USB cable, circuit, interface and battery are met, can flash charging be met, and 4.5a current can be applied. When the battery intelligent management system finds that it does not support it, it will intelligently start constant charging current into normal charging. Now oppo chargers are just matching their own mobile phones. The system compatibility needs to be improved.

2.2.3 Ti MaxCharge

Ti maxcharge's fast charging technology can support 14V voltage input when the current reaches 5A by integrating a 5A single lithium-ion battery charger circuit. Moreover, its fast charging technology solution is compatible with the high pass generation 2 technology, which is also suitable for the technical certification of MediaTek. Compared with some popular chargers, the charger of this technology can reduce the charging time by more than 50%, or even reduce the charging time to 60%. It also has a feature that it does not need to rely on the processor, and can independently distinguish and match the ordinary charger with 5V or higher voltage output.

3. CHARGER DESIGN

We can also judge the performance of charger by some problems in practical application. Normally, the battery will heat up at the end of the charging process, but if the battery is seriously hot. This means that the charger fails to tell that the battery is fully charged. This condition can damage battery life.

Some chargers are not overcharged, but they are often under charged. The normal use time of the mobile phone is very short after the user is fully charged. It indicates that the discharge time of the battery is short. For the mobile phone with original battery, the difference between the parameters and the actual use can be seen by comparing the reference time in the manual. If the difference is large, it means that the charger is faulty. It may also be the environment in which the phone is used or the battery itself.

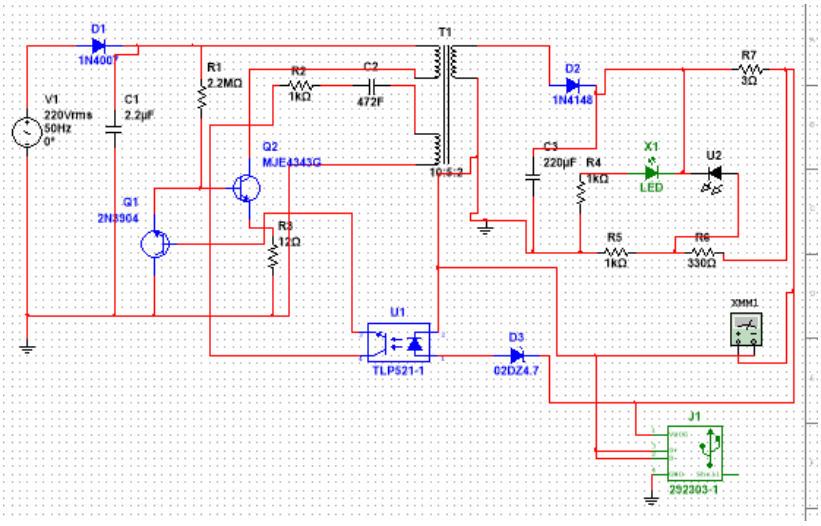

Fig. 3 Schematic circuit diagram

The final output voltage is about 5V and the output current is about 735mA. The simulation model is shown in Fig. 4.

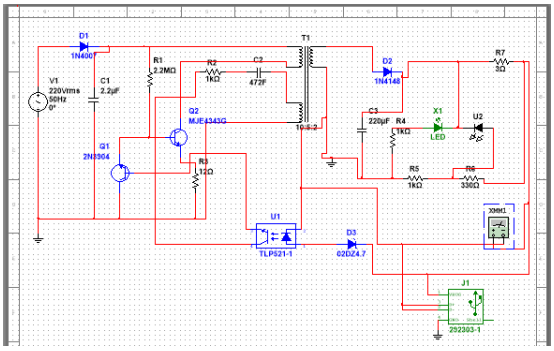

Fig.4 Simulation model

4. CONCLUSION

In this design, the utility power is converted into the voltage suitable for mobile phone charging. The rectifier circuit is used to convert the city power into DC power through the rectifier filter circuit, and then converted into high-frequency high-voltage pulse by the switch tube, and then the transformer into low-voltage pulse. The specific value of low-voltage depends on the voltage required by the charging equipment. Then, the low-voltage pulse is converted into the required direct current through the rectifier circuit and voltage stabilizing circuit. The conversion process from AC to DC should go through rectification circuit, transformer, voltage stabilizing circuit, etc.

ACKNOWLEDGEMENTS

Fund Project: project of science and Technology Department of Shaanxi Province (2019GY-014).

Project Name: equipment development of industrial image surface defect detection and classification system based on deep learning.

Fund Project: Xi'an Aeronautical University (2020HX019).

Project Name: Research on LCL control stability technology of grid connected inverter.

REFERENCES

[1] Tian Zhengnan, Shao Yuanlong, sun Jingyu. Farewell charger: a portable energy source [J]. Science Bulletin, 2019, 64 (36): 3771-3772.
[2] Yang Xiaoguang, Zhao Shuo, Gao Sijia, Shi Ranran, Xu linliang. Research and design of LLC resonant photovoltaic lithium battery charger [J]. Power technology, 2019,43 (08): 1328-1331.
[3] Jiang Chao, Du Guiping. Overview of bi directional DC-DC converter for vehicle charger [J]. Acta Sinica Sinica, 2019,17 (04): 1-9.
[4] Zhao Hengyang, Zhang Ping, Cai Huanyu, Shi Jianjiang. Development of an uninterruptible power supply charger [J]. Power electronics technology, 2016,50 (11): 27-29.
[5] Cao Yurong. Design of mobile phone fast charging system [J]. Power technology, 2016,40 (02): 370-372.

Author profile: Xue Ronghui (1978 -), female, Han nationality, Hancheng, Shaanxi Province, lecturer, main research direction: power electronics and power transmission, new energy power generation.